CITY OF DELAWARE
HISTORIC PRESERVATION COMMISSION
AGENDA

CITY COUNCIL CHAMBERS
1 SOUTH SANDUSKY STREET
7:00 P.M.

REGULAR MEETING JANUARY 24, 2018

1. ROLL CALL

2. APPROVAL of the Motion Summary of the Historic Preservation Commission meeting held on November 29, 2017 as recorded and transcribed.

3. REGULAR BUSINESS

   A. 2018-0086: A request by The Flying Pig Ale House for a Certificate of Appropriateness for a temporary sidewalk vestibule for 12 South Sandusky Street which is zoned B-2 (Central Business District) and located in the Downtown Core Sub-District of the Downtown Historic District Overlay.

4. STAFF COMMENTS

5. COMMISSION MEMBER COMMENTS AND DISCUSSION

6. NEXT REGULAR MEETING: February 28, 2018

7. ADJOURNMENT

HISTORIC PRESERVATION COMMISSION
MOTION SUMMARY
November 29, 2017

ITEM 1. Roll Call

Chairman Koch called the Historic Preservation Commission meeting to order at 7:00 p.m.

Members Present: Joe Coleman, Erinn Nicley, Stephanie Van Gundy, Councilman Kyle Rohrer and Chairman Roger Koch

Members Absent: Sherry Riviera and Vice-Chairman Hatten

Staff Present: Dianne Guenther, Development Planner

Motion to Excuse: Mr. Coleman motioned to excuse Ms. Riviera and Vice-Chairman Hatten, seconded by Councilmember Rohrer. Motion approved by a 5-0 vote.

ITEM 2. APPROVAL OF MOTION SUMMARY of the Historic Preservation Commission meeting held on October 25, 2017, as recorded and transcribed.

Motion: Mr. Nicley motioned to approve the amended Motion Summary of the Historic Preservation Commission meeting held on October 25, 2017, as recorded and transcribed, seconded by Ms. Van Gundy. Motion approved a by 3-0-2 (Rohrer, Coleman) vote.

ITEM 3. REGULAR BUSINESS

A. 2017-2923: A request by Jill Rice for an Informal Review for the proposed demolition and reconstruction of 50 West William Street which is zoned B-3 (Community Business District) and located in the Transitional Sub-district of the Downtown Historic District Overlay

Ms. Guenther provided a presentation on the request to demolish the building and the potential plans to rebuild on the property. She provided background history of the property and informed the Commission that the property has been vacant for approximately five years and has deteriorated. She discussed that the existing building is in unfinished condition and not the original structure or have any remaining architectural significant features.

APPLICANT:
Jill and Jeff Rice
6 Darlington Road
Delaware, Ohio 43015

Mr. and Ms. Rice discussed their plans to purchase the property and future plans for business. The Commission informed them that the concern of the Historic Preservation Commission is what the planned appearance and building materials and style will be. Chairman Koch provided information on the architectural standards and how they can access them. The Commission voiced their support for the demolition of the property and requested that the applicants come forward with a formal request and application. They also recommended that the applicant provide detail plans for the rebuild. Applicant expressed their understanding.

ITEM 4. STAFF COMMENTS

ITEM 5. COMMISSION MEMBER COMMENTS AND DISCUSSION
Mr. Nicley expressed his congratulations to the re-election of Mayor Riggle and other Councilmembers.

ITEM 6. NEXT REGULAR MEETING: December 20, 2017

ITEM 7. ADJOURNMENT

Motion: Mr. Coleman moved to adjourn the meeting, seconded by Mr. Nicley. The Historic Preservation Commission meeting adjourned at 7:40 p.m.

_____
Roger Koch, Chairman

_____
Elaine McCloskey, Clerk

EST 1808
CITY OF
DELAWARE
OHIO

HISTORIC PRESERVATION COMMISSION / STAFF REPORT
CASE NUMBER: 2018-0086
REQUEST: Certificate of Appropriateness
PROJECT: Temporary Sidewalk Vestibule for 12 South Sandusky Street
MEETING DATE: January 24, 2018

APPLICANT/OWNERS
The Flying Pig Ale House
12 South Sandusky Street
Delaware, OH 43015

REQUEST
2018-0086: A request by The Flying Pig Ale House for a Certificate of Appropriateness for a temporary sidewalk vestibule for 12 South Sandusky Street which is zoned B-2 (Central Business District) and located in the Downtown Core Sub-District of the Downtown Historic District Overlay.

LOCATION & DESCRIPTION
The project site is located at 12 South Sandusky Street, on the west side of South Sandusky Street between Spring and William Streets, in the Downtown Core of the Downtown Historic District Overlay. The properties immediately to the north, south, and east of this parcel lie within the Downtown Core, while the properties immediately to the west lie within the Transitional Sub-District of the Downtown Historic District Overlay. The zoning of the property is B-2 (Central Business District), as are the surrounding properties to the north, south, and east. The properties to its west are zoned B-3 (Community Business District).

The building is listed as a Background Building in the Sandusky Street National Register Historic District. (The background buildings are late 19th and early 20th century buildings whose facades have been covered with newer materials. The site maintains the scale, roofline, and uniform setback of the district and may still have original architectural features, although currently covered.) The Delaware County Auditor's Office indicates the year built as 1920, but interior architectural evidence indicates the late 1800s.

BACKGROUND/PROPOSAL
The circa 1910s streetscape photograph, taken from the intersection of West William and South Sandusky Streets, depicts the subject site on the west side of South Sandusky within a well-established city block. The circa 1940s photograph depicts city employees removing snow from South Sandusky Street in front of City Hall. Occupying the subject site is Moore's retail shop, shown in the background

12 South Sandusky Street – Circa 1910s and 1940s

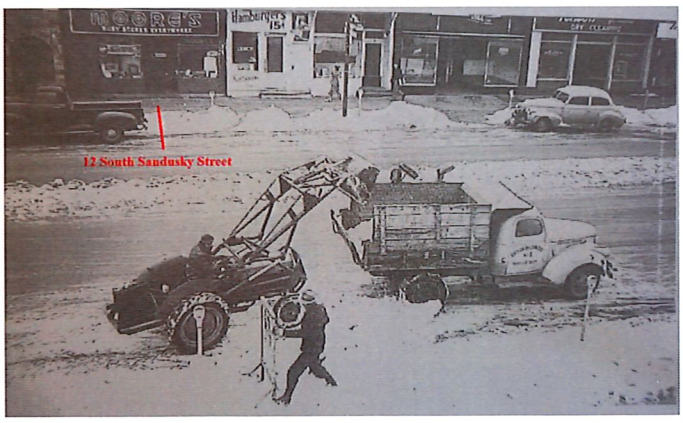

A brief review of business directories indicates the site was occupied by retail uses, a bakery, and various eateries. It is unclear what the building's original storefront looked like. In 2017, however, the Applicant achieved the goal of helping to revitalize this block of South Sandusky Street with completion of an extensive building renovation project, while maintaining an accurate and historical representation of Downtown Delaware (HPC Case 2016-2479).

12 South Sandusky Street – c 1950s and 2016 Prior to Renovation

12 South Sandusky Street -- Post-Renovation 2018

The Applicant also successfully opened for business in late 2017. The Flying Pig Ale House is "a classic bar with a modern touch, serving the finest comfort food, located in the heart of Delaware..." The menu offers a variety of craft beers, cocktails, and a lunch and dinner menu featuring barbecue inspired dishes and traditional comfort foods. With the onset of a frigid winter, and the wind-tunnel effect along Sandusky Street, the restaurant is unexpectedly experiencing blasts of cold air primarily affecting the seating area nearest the inset entry door each time a patron enters or exits the restaurant. To help shield guests from these wind events, the Applicant is requesting to install a temporary sidewalk vestibule, similar to that installed at 12 WEST restaurant less than a block away to the northwest at 12 West William Street (HPC 2014-1768). The main difference is that the Applicant will be removing the vestibule in the warmer weather in order to fully utilize the patio area.

12 WEST Restaurant Vestibule, 12 West William Street – Front (South) Elevation

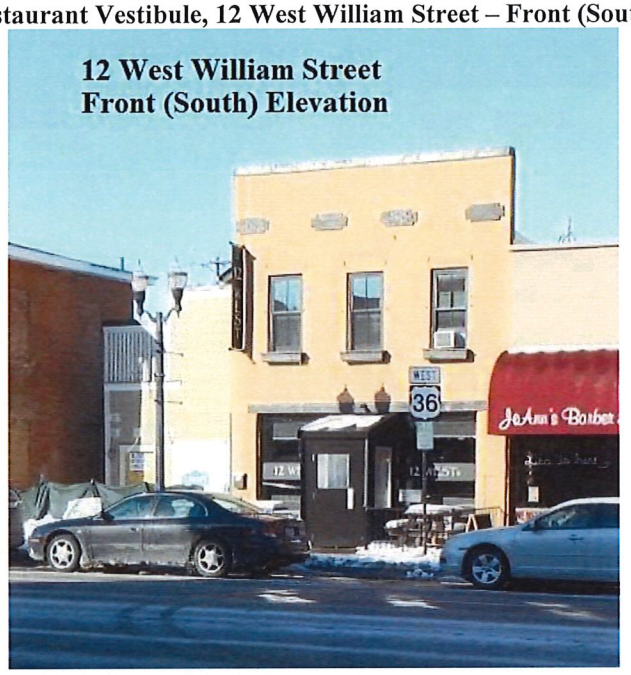

12 WEST Restaurant Vestibule, 12 West William Street – Facing West and Facing East

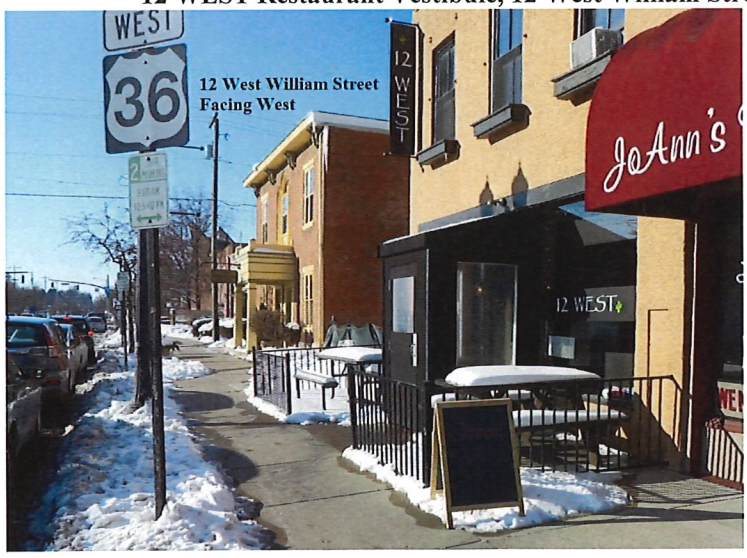

The proposed vestibule at 12 South Sandusky Street will be contained within the approved patio fence located in front of the restaurant. With the inset entry, it will extend only 24 inches away from the storefront and will also

extend the width of the inset entry opening, which is 8 feet 8 inches wide. The top of the vestibule will be attached under the existing awning. From a visual perspective, the vestibule will extend no further, and will be approximately in line with, the gas meter enclosure already in place.

Approximate Location of Vestibule in Approved Patio of 12 South Sandusky Street – Facing North

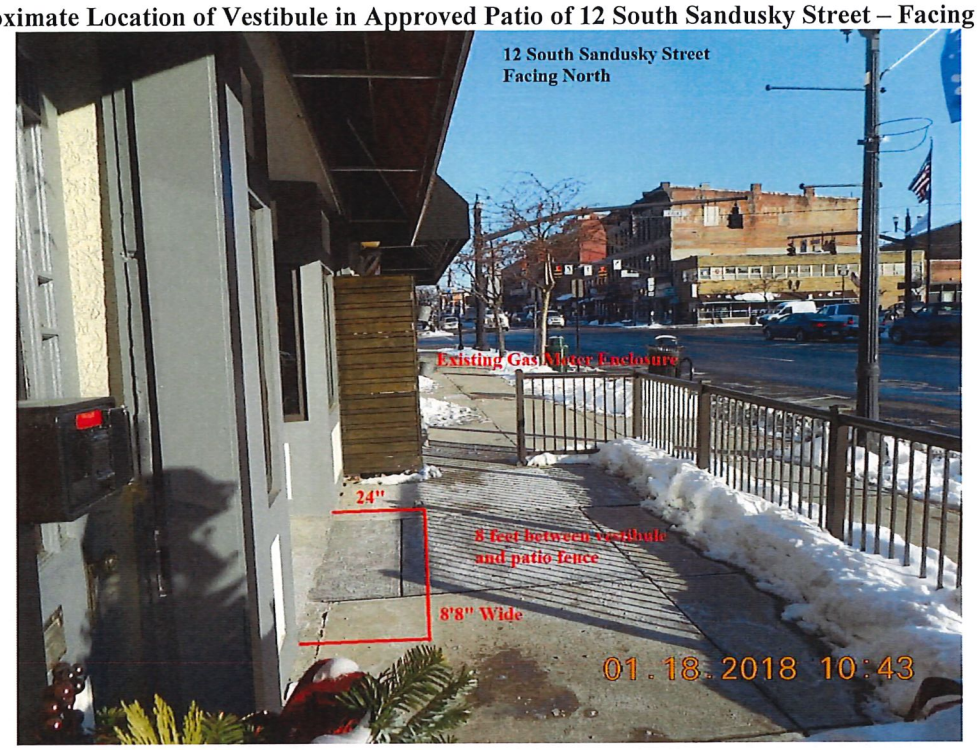

Approximate Location of Vestibule in Approved Patio of 12 South Sandusky Street - Facing South

As explained by the Applicant, the vestibule will be constructed by the same awning company which installed the storefront awning. (This is the same company that constructed the vestibule at 12 WEST restaurant.) According to the awning company, the vestibule meets current ADA standards, with a 48" depth from the vestibule door to the storefront inset entry door. The width of the interior of the vestibule will be a comfortable 8 feet 8 inches—which is the width of the inset entry. The vestibule door opening is 36 inches. To maintain consistency with the appearance of the storefront, 21 inch by 64 inch (clear vinyl) 'windows' will be installed on the vestibule allowing light into the entryway. The vestibule will be affixed to the concrete sidewalk with tapcons, which will allow for the vestibule removal in the warmer months. Plugs will be inserted into the tapcon openings. The vestibule frame will be aluminum and will be covered with Sunbrella fabric.

The awning company has provided vestibule renderings in three different colors for consideration by HPC:

1) Sunbrella Tuscan (to match the existing awning and the Applicant's first choice):

2) Sunbrella Charcoal Grey (to complement the storefront paint color):

3) Sunbrella Black (to match the existing vestibule at 12 WEST restaurant and to complement the storefront paint color):

The Applicant wishes to install the vestibule within the next month if possible, and the matter is coming before HPC for a determination (1) to allow the installation of a temporary sidewalk vestibule at 12 South Sandusky Street and (2) for approval of one of the design presented. The Applicant prefers the Sunbrella Tuscan color fabric to match the existing awning, but is open to HPC's recommendation. The selected awning company has provided a specification sheet showing how the vestibule is to be affixed to the building and to the sidewalk. They said the vestibules are easily dis-assembled and stored, and the Applicant desires to remove the vestibule in the warmer months to fully utilize the patio. The fabric and frame are designed to withstand three (3) foot snow loads and up to 80 mph winds. The awning company will provide engineering drawings when requested indicating all code details, including ADA requirements. The size of the door opening and the vestibule itself allows for appropriate passage and turn-around for a wheelchair. The awning company would be required to obtain an installation permit and submit engineering drawings, which would be reviewed by the Chief Building Official and Zoning Administrator for code compliance, as well as other City Departments to ensure concurrence with the installation. If approved, the Applicant understands a License would be issued by the City of Delaware and recorded at the County Recorder's Office.

The Applicant indicates that while vestibules are not standardized because each storefront is unique and this is only the second such request in the City of Delaware, it is felt that it is necessary for the comfort of the guests of The Flying Pig Ale House. The color selections are appropriate and are similar to the awning colors already approved in the Historic Downtown.

STAFF ANALYSIS

City Staff is generally supportive of the proposed plan; however, the support is not without reservation and concern surrounding the impact of the appearance of possibly multiple vestibules within confined areas of a downtown city block and the quality of the vestibules themselves on the historic fabric of the commercial historic district. Liability issues regarding placement on the public right-of-way is also a matter of importance.

The vestibule at 12 WEST restaurant at 12 West William Street is the beta test for temporary sidewalk vestibules in the City of Delaware. To date, and as reported by the building owner to Staff and the HPC, the vestibule seems to be well received by the community and the restaurant patrons. The building owner finds the vestibule is helpful to contain the weather elements for this particular building throughout the year in warmer and colder

weather. It also appears to help with both heating and cooling costs in the restaurant. Per Staff experience during the winter months, cold air still enters the restaurant affecting the tables nearest the entry door depending on how the vestibule entry door and the restaurant entry door are opened by the patrons. However, interior conditions are certainly better than they were without the vestibule.

HPC has consistently indicated that interior space limitations, exterior placement limits, material and design details, and city and state code requirements would essentially constitute the outside parameters of the addition of temporary sidewalk vestibules in the Historic Downtown. Staff offers that a concrete set of guidelines is difficult to establish and define in further detail since each parcel, building, and business is unique onto itself with its own set of defining circumstances, as well as the fact that the sidewalk areas are all different with different obstructions. HPC also understood that this is a new concept in this community, and the approval of the 12 WEST Application could set a precedent for future applications; however, these require specific case-by-case review. Therefore, each new application would need to appear before HPC and an evaluation made of the circumstances specific to each case prior to approval. In addition, the business will need to have a current approved patio permit in place as one parameter was to have the vestibule inside a conforming patio area. Thus, the temporary sidewalk vestibule would currently fall under the jurisdiction of a Sidewalk Use Permit, currently included in the Architectural Standards for approved patios. And indeed this has occurred since the 12 WEST vestibule approval in 2014. A number of business and building owners have inquired about vestibules, with some appearing before HPC for guidance.

Another parameter that has evolved over time has been the effort of the Applicant in exploring other avenues to stop the cold air infiltration into the business space. Therefore, the request for a sidewalk vestibule is intended to be a 'last resort' request. In the case of The Flying Pig Ale House, per Staff experience, cold air from the entry door does create an uncomfortable atmosphere for dining closer to the entry door. The Applicant indicated that the dining room tables have been reconfigured, that adding additional space heaters in the small spaces near the entry door dining area may pose a fire and trip hazard, that there are interior space limitations for an interior vestibule, and that the installation of an air curtain at the entry door would be cost prohibitive and require major electrical re-routing to accomplish.

Staff confirms that the Applicant has a valid sidewalk use permit for an enclosed outdoor patio. Staff also offers that considering the storefront inset entry layout and that the extension of the vestibule is proposed to be only 24 inches and is approximately in line with the gas meter enclosure, the vestibule's appearance may not be as obtrusive to the public view.

Interior of The Flying Pig Ale House Inset Entry Way

Due to the delay in the submission of Application materials, Staff is currently in the process of collecting comments from others City Departments regarding this proposed project. Referring to the 12 WEST submission, an informal concept review by City Departments indicated concerns with occupying the public right-of-way with an enclosed structure; egress for fire and access for emergency personnel; proximity to underground utilities and shut-offs below the sidewalk; impeding stormwater drainage; creating corners where trash, leaves, snow, etc. can accumulate; and installation on uneven sidewalks.

Staff recommends that the review process for temporary sidewalk vestibules continue to be two-fold with (1) HPC reviewing the design and basic approach of the temporary nature of the improvement under the jurisdiction of approved sidewalk use permit and on qualifying environmental change, and (2) the City of Delaware must give approval for temporary occupancy of the sidewalk or right-of-way for this type of installation. Staff would suggest that the Application for The Flying Pig Ale House also be a one-time, one-year test for this particular business, with future consideration based upon a Staff and Applicant (and possibly HPC) debriefing in 2019. For the sake of consistency and minimizing visual impact, Staff recommends that the vestibule fabric color be black.

STAFF RECOMMENDATION (HPC 2018-0086) – CERTIFICATE OF APPROPRIATENESS)

Staff recommends approval of the request by The Flying Pig Ale House for a Certificate of Appropriateness for a temporary sidewalk vestibule for 12 South Sandusky Street which is zoned B-2 (Central Business District) and located in the Downtown Core Sub-District of the Downtown Historic District Overlay, with the following conditions that:

1) The Applicant shall maintain an approved sidewalk use permit for the outdoor patio area, current insurance coverage, and liability waiver in favor of the City of Delaware.
2) The Applicant understands and agrees the installation of the temporary sidewalk vestibule shall be a one-time, one-year basis only, according to the specifications submitted with this request for a Certificate of Appropriateness. Future consideration is based upon a Staff and Applicant debriefing in 2019. The subject shall be revisited and brought before the HPC for approval at that time should Staff and the Applicant find the test to be successful.
3) The Applicant shall adhere to Historic District Architectural Standards and zoning and building code requirements for this installation.
4) The Applicant understands and agrees that, per the temporary sidewalk use regulations, this approval shall be fully revocable at any time for any reason at the sole discretion of the City of Delaware. The Applicant shall be responsible for any and all costs in this regard. The City may require, at its sole discretion, additional licensure, lease, or permits to be required for this proposed temporary occupation of its right-of-way.
5) The Applicant understands and agrees that, at the Applicant's sole expense, the Applicant shall restore the sidewalk as required by the City of Delaware and to the satisfaction of the City in its sole discretion.

COMMISSION NOTES:

_____

_____

_____

_____

_____

MOTION: _____ *1st* _____ *2nd* *approved* *denied* *tabled*_____

CONDITIONS/MISCELLANEOUS:

FILE: PLANNING/HPC CASES/2018 CASES/2018-0086_12 S SANDUSKY TEMPORARY SIDEWALK VESTIBULE
ORIGINAL: 1/18/2018
REVISED:

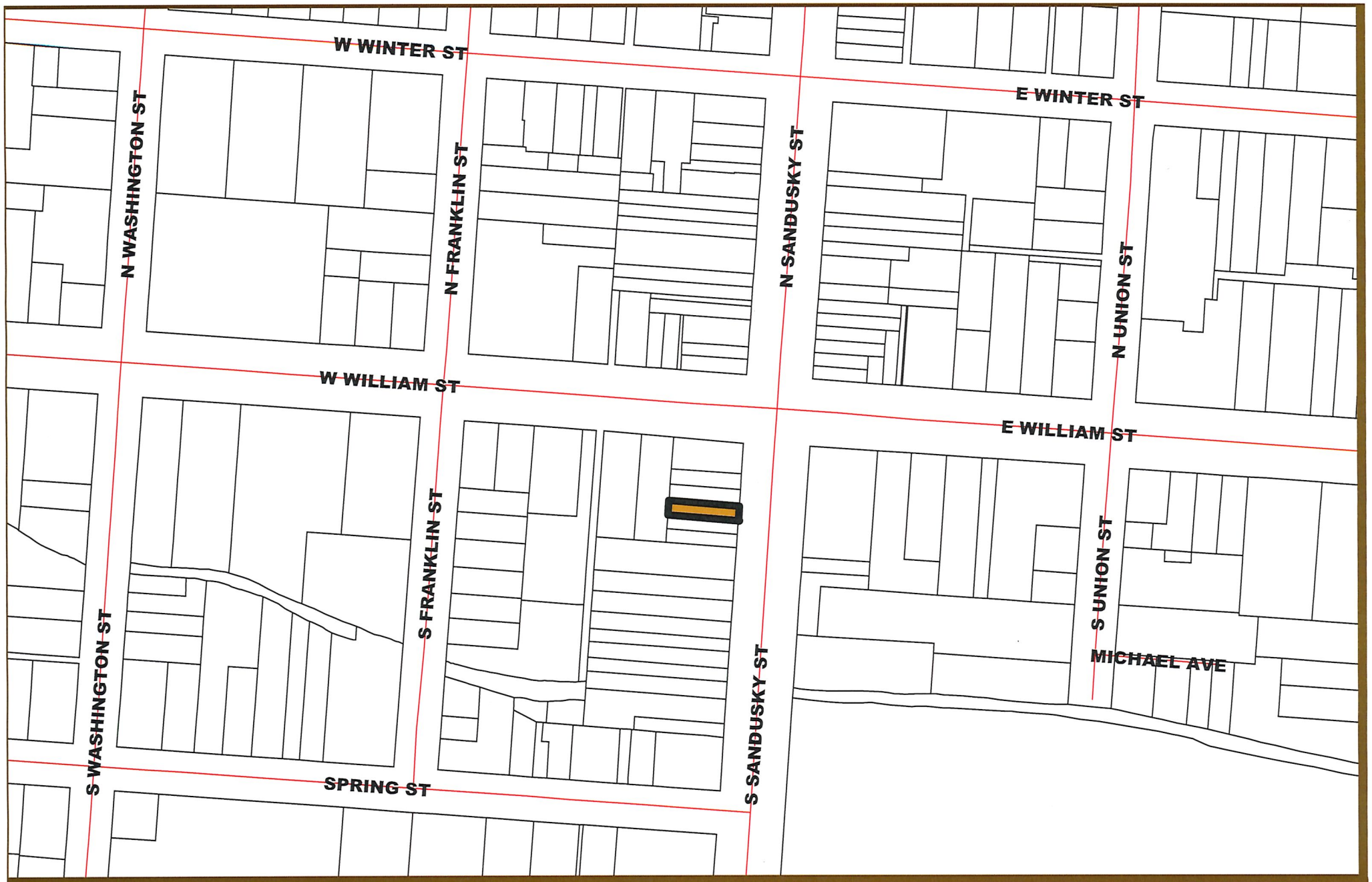

EST 1808
CITY OF
DELAWARE
OHIO

2018-0086
Certificate of Appropriateness - Temporary Sidewalk Vestibule
The Flying Pig Ale House - 12 South Sandusky Street
Location Map

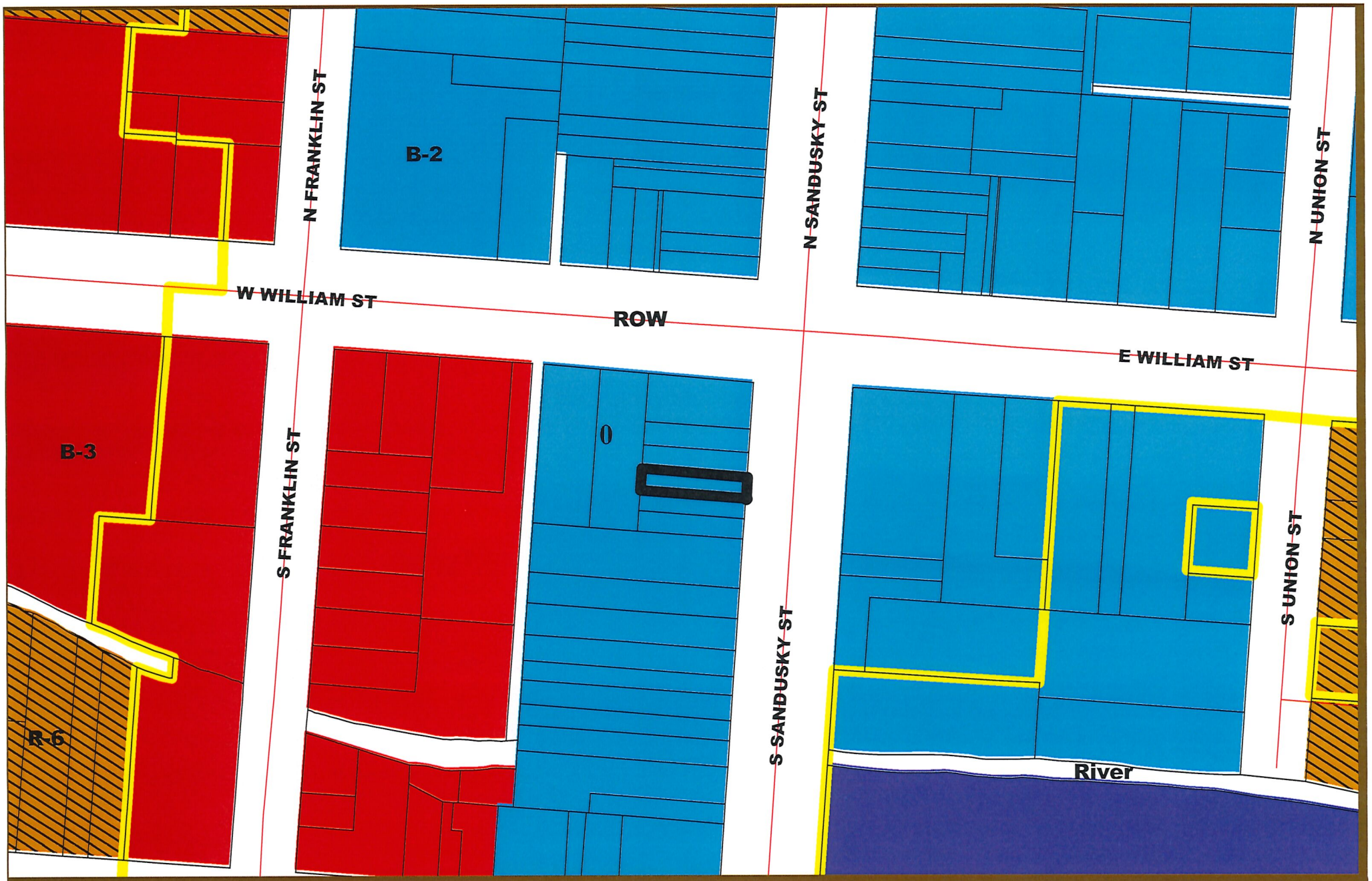

EST 1808
CITY OF
DELAWARE
OHIO

2018-0086
Certificate of Appropriateness - Temporary Sidewalk Vestibule
The Flying Pig Ale House - 12 South Sandusky Street
Zoning Map

EST 1808
CITY OF
DELAWARE
OHIO

2018-0086
Certificate of Appropriateness - Temporary Sidewalk Vestibule
The Flying Pig Ale House - 12 South Sandusky Street
Historic District Map

EST 1808
CITY OF
DELAWARE
OHIO

2018-0086
Certificate of Appropriateness - Temporary Sidewalk Vestibule
The Flying Pig Ale House - 12 South Sandusky Street
Aerial (2016) Map

N

APPROVAL:

NAME: _____

DATE: _____

Note *This rendering is provided to the customer for the purpose displaying a product from Columbus Awning Company. It is an approximate illustration and is not an exact reflection of the completed work..*

COLUMBUS AWNING COMPANY

Columbus Awning Co.
225C East Broadway
Westerville, Ohio 43081

Flying Pig
12 ~~X~~ S. Sandusky
Delaware, OH

Color Choice:
Sunbrella ~~Tucan~~
Tuscan

APPROVAL:

NAME: _____

DATE: _____

Note *This rendering is provided to the customer for the purpose displaying a product from Columbus Awning Company. It is an approximate illustration and is not an exact reflection of the completed work..*

COLUMBUS AWNING COMPANY

Columbus Awning Co.
225C East Broadway
Westerville, Ohio 43081

Flying Pig
124 S. Sandusky
Delaware, OH

Color Choice:
Sunbrella Charcoal Grey

APPROVAL:

NAME: _____

DATE: _____

Note *This rendering is provided to the customer for the purpose displaying a product from Columbus Awning Company. It is an approximate illustration and is not an exact reflection of the completed work..*

COLUMBUS AWNING COMPANY

Columbus Awning Co.
225C East Broadway
Westerville, Ohio 43081

Flying Pig
12~~4~~ S. Sandusky
Delaware, OH

Color Choice:
Sunbrella Black

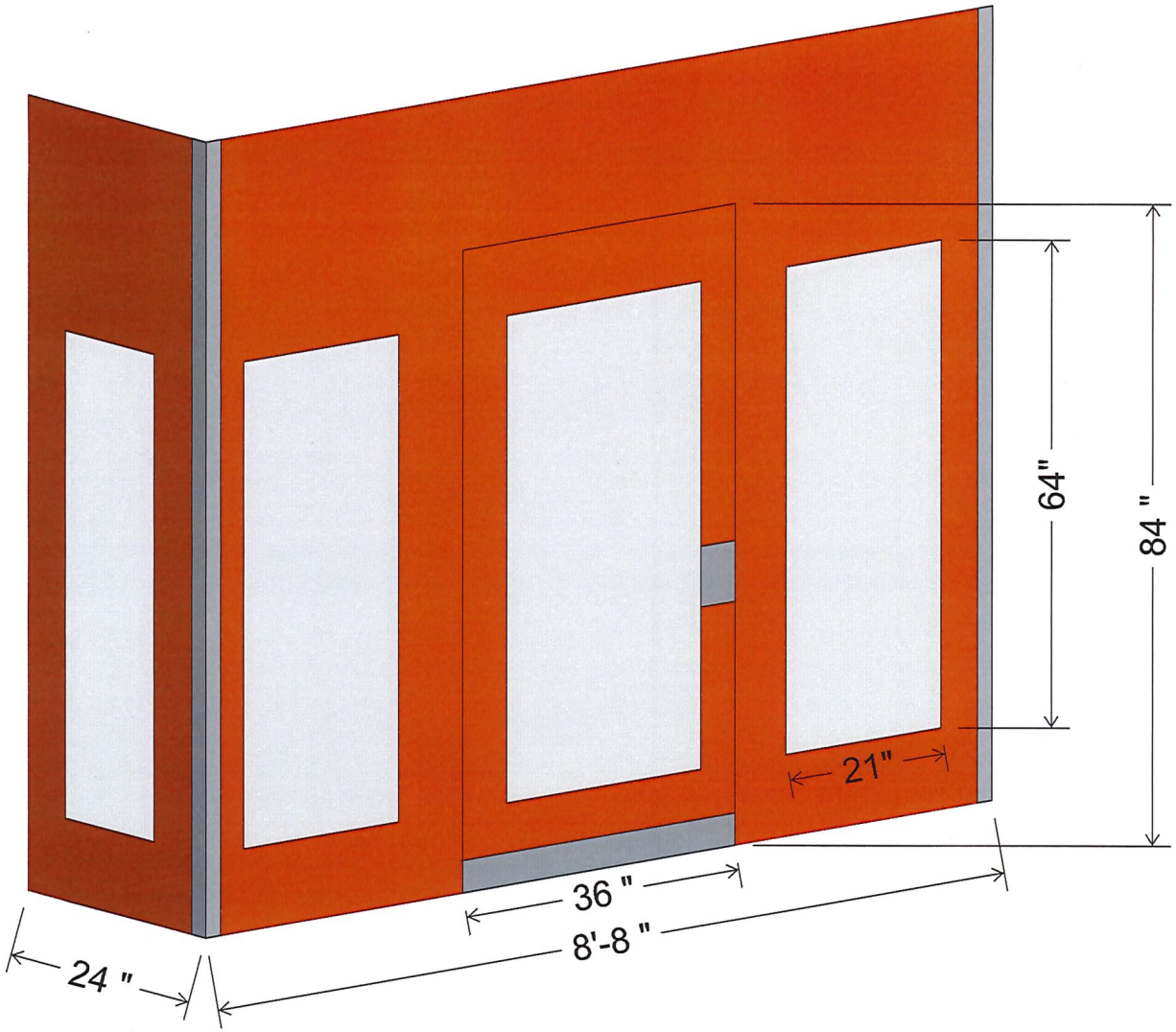

COLUMBUS AWNING COMPANY

Columbus Awning Co.
225C East Broadway
Westerville, Ohio 43081

Flying Pig
4 S. Sandusky
Delaware, OH

Sunbrella Tuscan

◇ FRAME TO AWNING

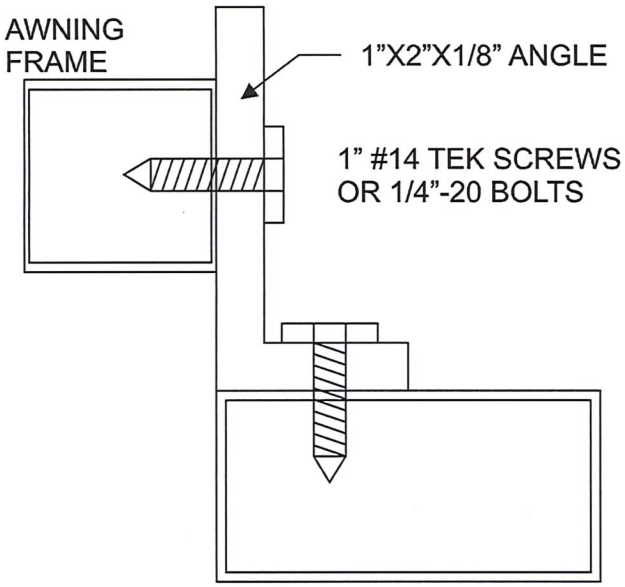

» FRAME TO POST

TOP VIEW

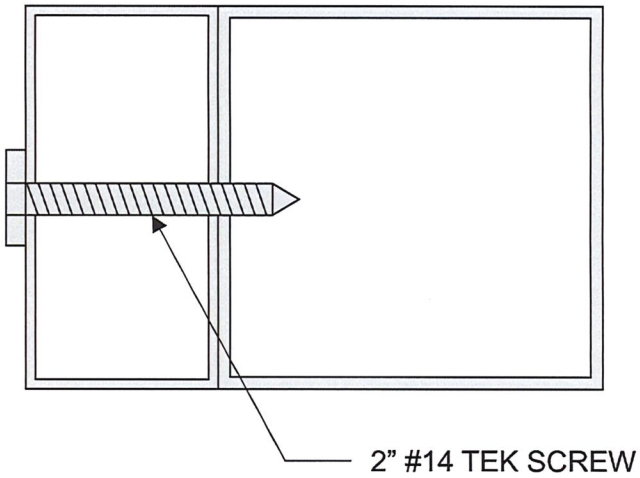

⊗ FRAME TO CONCRETE

3/8 DROP IN ANCHORS
every 2', min

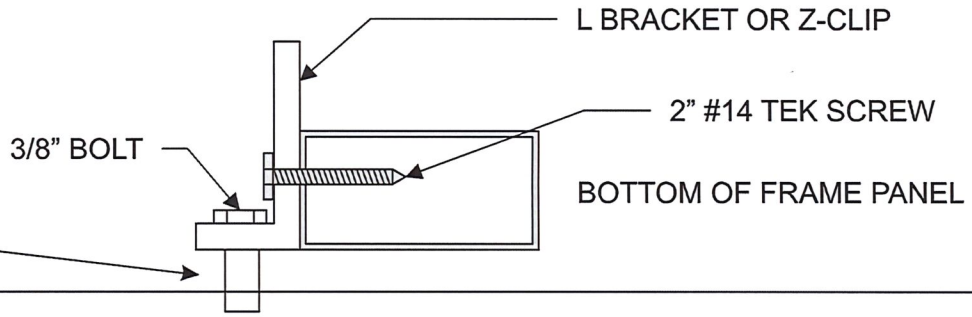

COLUMBUS AWNING COMPANY

Columbus Awning Co.
225C East Broadway
Westerville, Ohio 43081

Flying Pig
4 S. Sandusky
Delaware, OH

Sunbrella Tuscan

Door Details

Door Closure Arm
Mfg: Norton
Item# CLP 8501
1/door

1X2 Aluminum
(staple and tube)
0.090" wall thickness

DOOR FRAMES

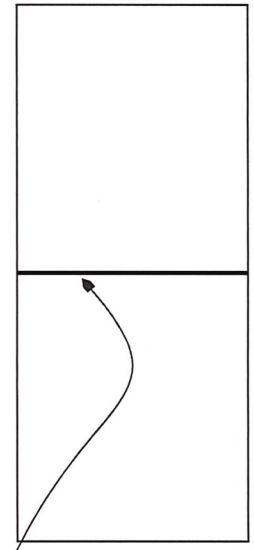

2x2 aluminum

Pull Plate
Mfg: Iron Man
Item# 65562.0
3-1/2"x15"

Push Plate
Mfg: Schlage
Item#C8200PA28
3-1/2"x15"

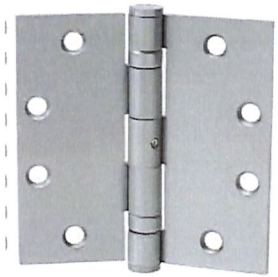

Hinges
Everbuilt #15487
4-1/2"Ball Bearing Hinge
Door Hinges (3/door)

Scale 1"=30"

COLUMBUS AWNING COMPANY

Columbus Awning Co.
225C East Broadway
Westerville, Ohio 43081

Flying Pig
4 S. Sandusky
Delaware, OH

Sunbrella Tuscan

FOR STAFF USE ONLY: 2018-0086

CITY OF DELAWARE
PLANNING & COMMUNITY DEVELOPMENT

Certificate of Appropriateness Application

RECEIVED JAN 18 2018 CITY OF DELAWARE PLANNING & COMMUNITY DEV.

Historic Subdistrict ☒ **Downtown Core** ☐ **Residential** ☐ **Transitional**

Address 12 S. Sandusky St.

Business name The Flying Pig Ale House

Applicant Name/Contact Person Amanda Sykes Phone 614-240-0626

Address 324 Pecan Ct. Del. 43015

Email amandalsykes@yahoo.com

*if the Applicant is not the owner of the property, the Property Owner is required to sign the application to authorize proposed changes.

Property Owner Yuegang Chen - Typhoon Asian Fusion Bistro Inc. Phone 614-806-8677

Address

Email Yuegang11@yahoo.com

Project Type

☐ Signs, Graphics or Awnings ☐ New Construction ☒ Exterior Building/Site Alterations
☐ Demolition Permit(s) ☐ Other (specify): temporary Vestibule

Work Description (please type or print legibly)

Describe the proposed project in detail, describing materials and colors proposed, including all changes to the building, site or lot. Include all features to be removed, altered, or added and provide a narrative of why the particular type of construction or other environmental changes are being proposed. Indicate all materials to be used. Attach additional sheets as needed.

We propose to build a temporary ~~cave~~ vestibule to help sheild guests from such a strong cold blast when door is ~~pe~~ open. The Vestibule will be constructed by Columbus Awning Company, same company that completed our awning as well as the Vestibule at 12 West. Proposed colors are Black, gray, or Tuscan, which matches the color of our current awning. The vestibule

meets current ADA code, with a depth of 24" from the outter most part of our facade, giving it about 48" from door to door. The Width is 8'-8" and the door opens outward. To maintain consistency with the look of our facade, 21" x 64" windows are on the Vestibule allowing light to pass through, avoiding dark, hard to see entrance. The bolts used to secure the vestibule are removeable and when warm weather is back, we plan to remove the structure and put drop in anchors into vacant bolt holes in concrete.

While Vestibules are not Standardized or utilized much in Delaware, we feel that it is necesary for the comfort of our guests. The colors are appropriate and fit within already approved awnings in downtown. We plan to remove the structure once warmer weather approaches.

Materials to submit with application: 1 electronic copy and 12 hard copies if required to appear before HPC Commission.

*Check made payable to the City of Delaware in the amount of $50.00
*Legible Photographs, digital copies or copied from a negative, not photocopied
*Site Plans showing view from above, plus elevation plans showing the view from front, sides, and rear drawings for new construction, modifications or signs showing *dimensions, setbacks, colors, and specifications* of any window, door, trim, lintel, sign, base, header, or other element to be installed/modified
*Material samples/manufacturers brochures which show/describe materials to be used
*Color samples must be provided, such as manufacturer paint chip cards or brochures depicting proposed color selections
*Interior floor plans, where appropriate

Variance Explanations: If the Applicant believes that strict application of the Standards and Guidelines for the Historic District will create a substantial economic hardship or that there is an unusual and compelling circumstance, a narrative to support a Variance from, or waiver of, the Code requirements may be submitted. The Variance or waiver shall be granted only if the Commission deems that at least one of the following six (6) criteria is met:

- There would be substantial economic reduction in the value of the property due to application of the Standards and Guidelines;
- The property cannot be maintained in its current form and substantial economic burden would result from the application of the Standards and Guidelines;
- No reasonable alternative exists;
- The property has little or no historical or architectural significance;
- The property cannot be reasonably maintained in a manner consistent with Standards and Guidelines; or
- No reasonable means of saving the property from deterioration, demolition, or collapse exists.

Deadline: Applications must be submitted THIRTY (30) DAYS prior to the Historic Preservation Commission meeting.

Public Notification: Staff will notify property owners within 150' of the site as required.

Meeting Date/Time: 4th Wednesday of each month at 7:00 pm in Council Chambers on the second floor of Delaware City Hall, 1 South Sandusky Street, Delaware, OH 43015.

***Please Note** the Commission might table the application if the applicant is not present to answer questions.

x _____ 1/11/18
Signature of Applicant Date

x _____ 1/11/18
Signature of Owner (if not the Applicant) Date

Application Fee $50.00 Fees Received $ 50.00 Received by dlg Date 1/18/18