NOTES:
THE CURB BOX SHALL BE PLACED 1'-0 FROM THE EDGE OF THE SIDEWALK OR 2'-0 INSIDE THE RIGHT-OF-WAY OR EASEMENT LINE WHEN NO SIDEWALK IS PRESENT OR PROPOSED.

THE CURB STOP SHALL BE INSTALLED WITH VALVE OPENING FACING THE STRUCTURE TO BE SERVED. THE CURB STOP SHALL TURN '$\frac{1}{4}$ TURN' CLOCKWISE ON TO OFF POSITION (TYPICAL).

CURB BOXES SHALL BE PLACED A MINIMUM OF 20'-0 FROM ANY EXISTING OR PROPOSED FOUNDATION OR STRUCTURE.

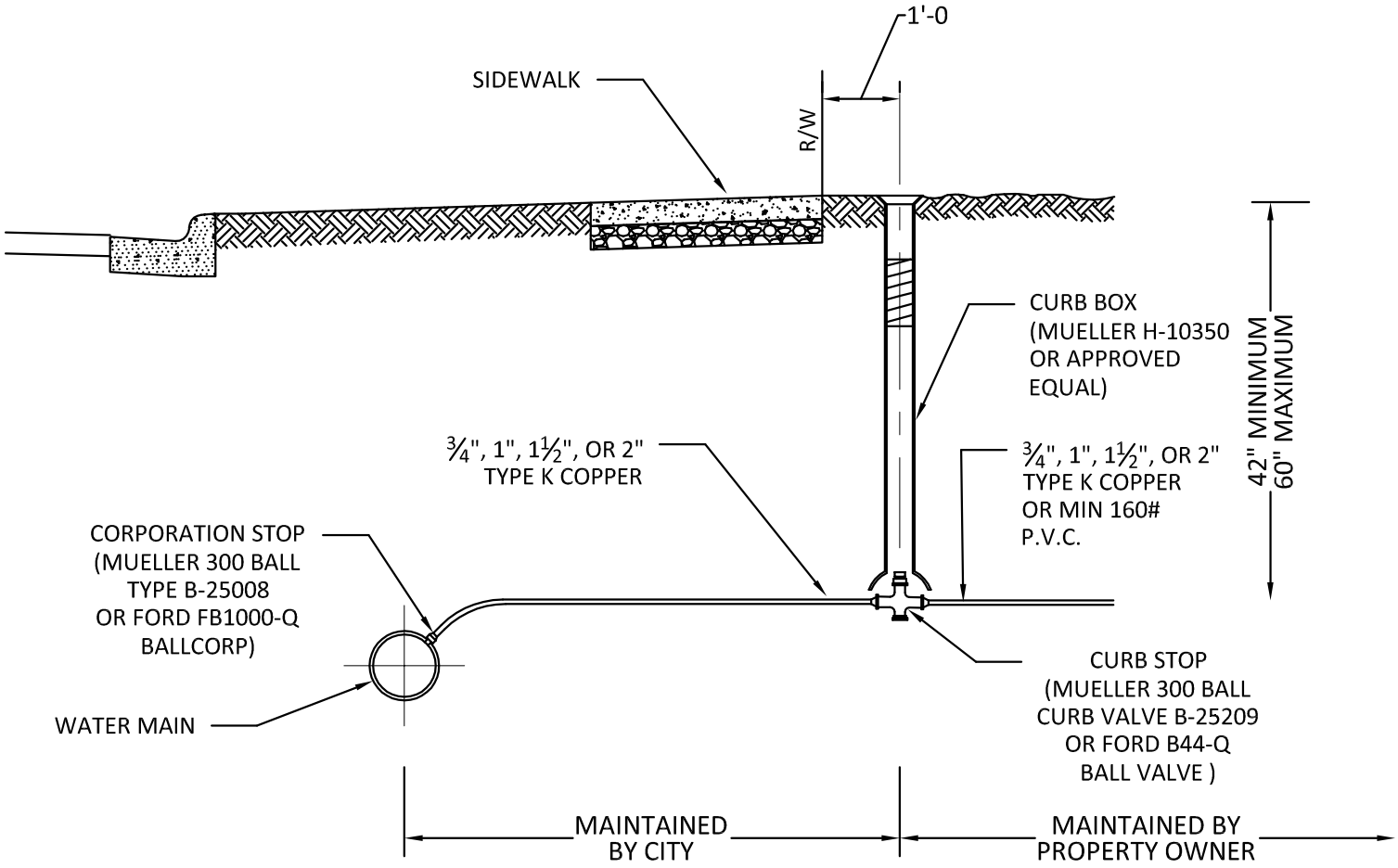

ENGINEERING DEPARTMENT OF ENGINEERING SERVICES	STANDARD DETAIL CURB BOX INSTALLATION DOMESTIC WATER SERVICE	WATER WTRD-1.1 Rev. 10/31/2012

S:\ENGINEERING\ENGINEERING DEPARTMENT\STANDARDS AND SPECIFICATIONS\2012 STANDARD DRAWINGS\DWG FILES - DO NOT CHANGE\04 WATER\WTRD-1.1_WATER SERVICE DETAIL.DWG - 12/18/12

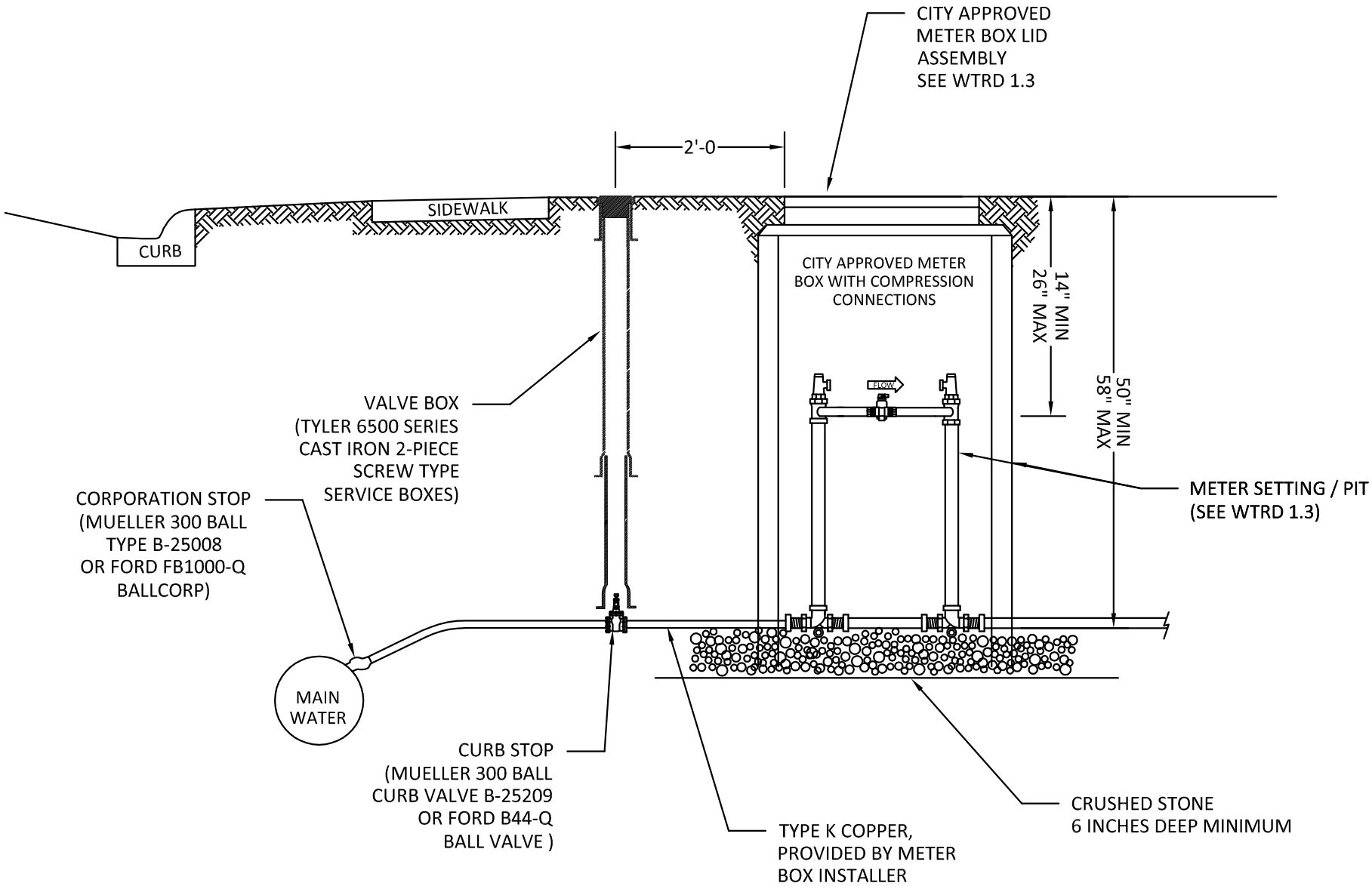

NOTE: THE METER BOX INSTALLATION MUST BE INSPECTED PRIOR TO BACKFILLING AND METER INSTALLATION

ENGINEERING
DEPARTMENT OF ENGINEERING SERVICES

STANDARD DETAIL

TYPICAL 5/8 INCH THRU 1-1/2 INCH METER BOX INSTALLATION

WATER

WTRD-1.2

Rev. 11/09/2012

Domestic Meter Size	Meter	Pit	Cover**
5/8" x 3/4"	AMCO C-700*	PSB-244-18-48-G	C32-T
3/4"	AMCO C-700*	PSBHC-344-20-48-G	C-3-T
1"	AMCO C-700*	PSBHC-444-20-48NAG	C-3-T
1-1/2"	AMCO C-700*	PMBHH-688-36-HB42 with 2 C14-66-Q quick joint adaptors	MC-36-T
2"	AMCO C-700*	Special drawing number PMLHH-788-95455028 with 2 C14-77-Q quick joint adaptors	MC-36-T

* Model C-700, magnetic drive, positive displacement, measuring in 100 cubic feet with a glass-lens scancoder (Pit application).

** Cover to include City of Delaware logo.

NOTE: Pit and cover numbers are Ford Meter Box Co. (or equivalent)

ENGINEERING
DEPARTMENT OF ENGINEERING SERVICES

STANDARD DETAIL

STANDARD METER PIT SIZING CHART

WATER

WTDR-1.3

Rev. 11/09/2012

S:\ENGINEERING\ENGINEERING DEPARTMENT\STANDARDS AND SPECIFICATIONS\2012 STANDARD DRAWINGS\DWG FILES - DO NOT CHANGE\04 WATER\WTRD-1.3_STD MTR PIT SIZE CHART.DWG - 12/18/12

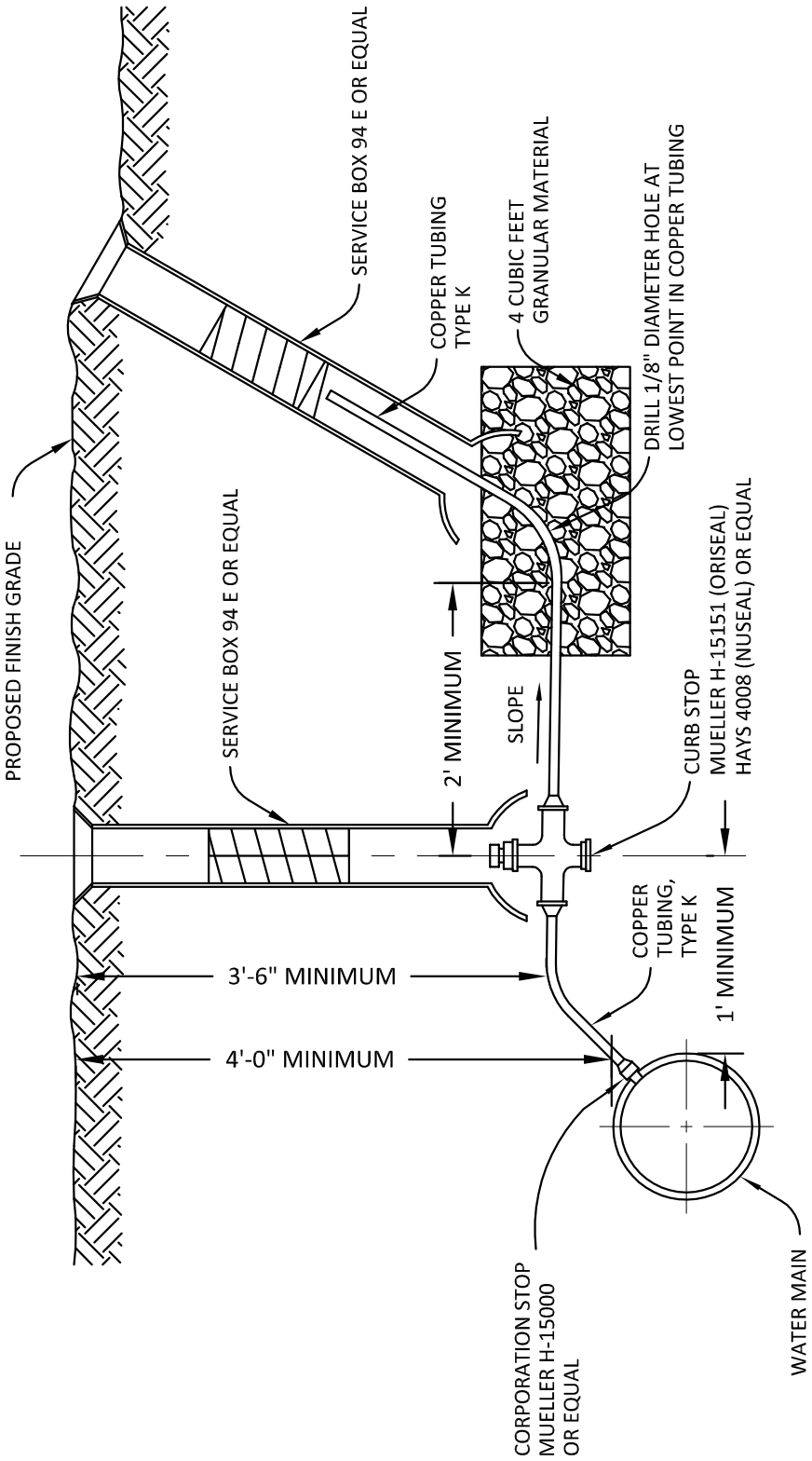

ENGINEERING

DEPARTMENT OF ENGINEERING SERVICES

STANDARD DETAIL

TYPICAL AIR RELEASE

WATER

WTRD-2.0

Rev. 11/09/2012

S:\ENGINEERING\ENGINEERING DEPARTMENT\STANDARDS AND SPECIFICATIONS\2012 STANDARD DRAWINGS\DWG FILES - DO NOT CHANGE\04 WATER\WTRD-2.0_TYPICAL AIR RELEASE.DWG - 12/18/12

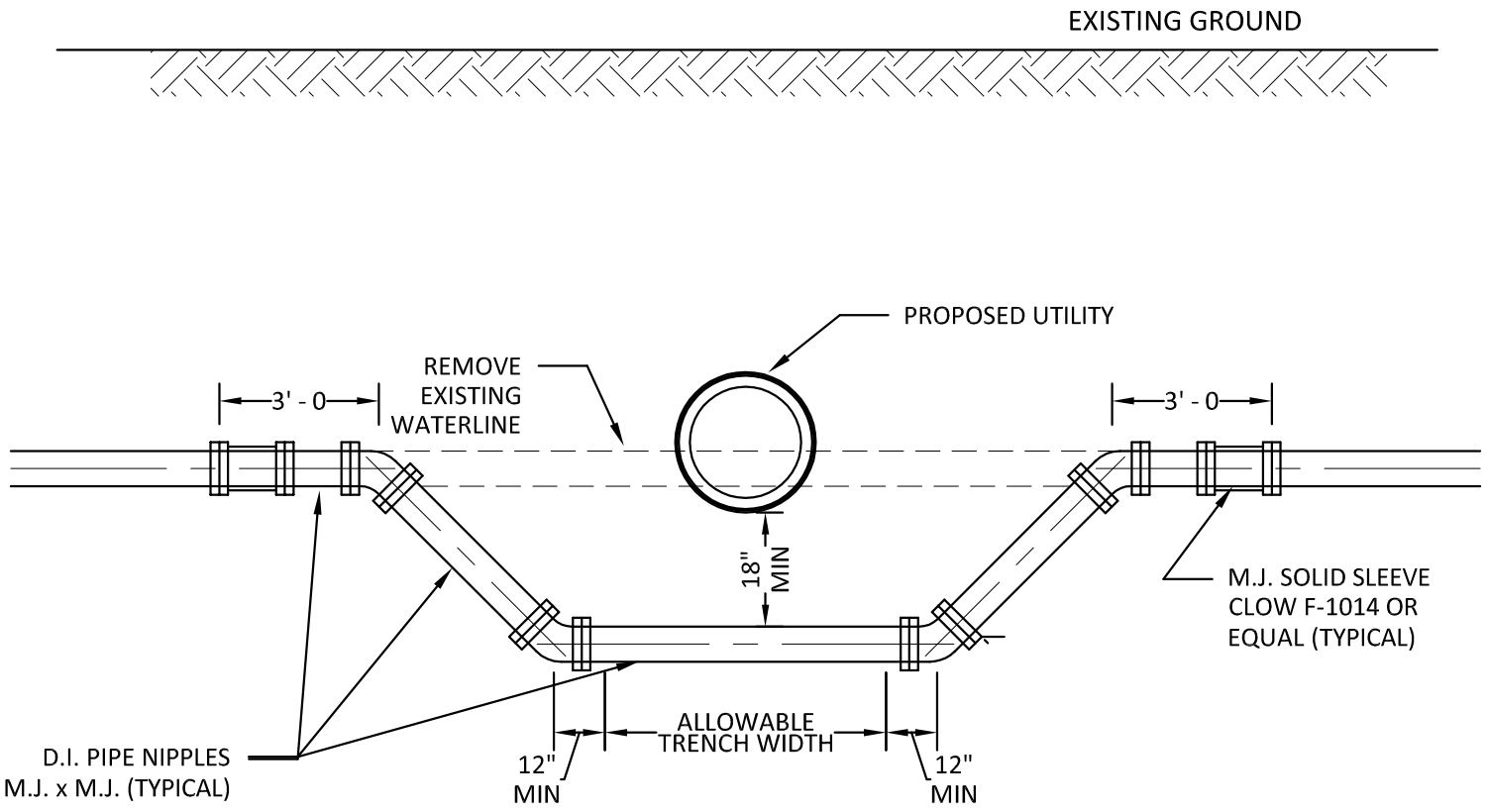

NOTES:
TIME AND DURATION OF SHUT DOWN SHALL BE DETERMINED BY THE CITY OF DELAWARE (COD).

NOTIFY THE COD - PUBLIC UTILITIES DEPARTMENT 48 HOURS PRIOR TO THE SHUT DOWN, SO THE COD CAN NOTIFY ALL WATER CUSTOMERS AFFECTED BY THE PROPOSED WORK AT LEAST 24 HOURS IN ADVANCE TO THE SHUTDOWN.

ALL BENDS SHALL BE SECURED BY RETAINING GLANDS, RODDING OR OTHER METHODS AS APPROVED BY THE COD TO RESTORE MAIN TO SERVICE AS SOON AS POSSIBLE. CONCRETE BACKING SHALL THEN BE PLACED IN ACCORDANCE WITH COD STANDARD DETAILS.

THE RELOCATED LINES SHALL BE LAID TO THE NEW LINE AND GRADE, TESTED AND DISINFECTED PRIOR TO SHUT DOWN OF EXISTING MAIN AND CONNECTION OF THE RELOCATED LINES TO THE EXISTING MAIN.

ALL WATER LINES SHALL BE DISINFECTED BY SWABBING WITH A 5 PERCENT HYPOCHLORITE SOLUTION IN ACCORDANCE WITH THE APPLICABLE SECTIONS OF THE AWWA C-601.

ENGINEERING DEPARTMENT OF ENGINEERING SERVICES	STANDARD DETAIL TYPICAL WATER LINE LOWERING	WATER WTRD-3.0 Rev. 11/09/2012

S:\ENGINEERING\ENGINEERING DEPARTMENT\STANDARDS AND SPECIFICATIONS\2012 STANDARD DRAWINGS\DWG FILES - DO NOT CHANGE\04 WATER\WTRD-3.0_WATERLINE DEFLECT.DWG - 12/18/12

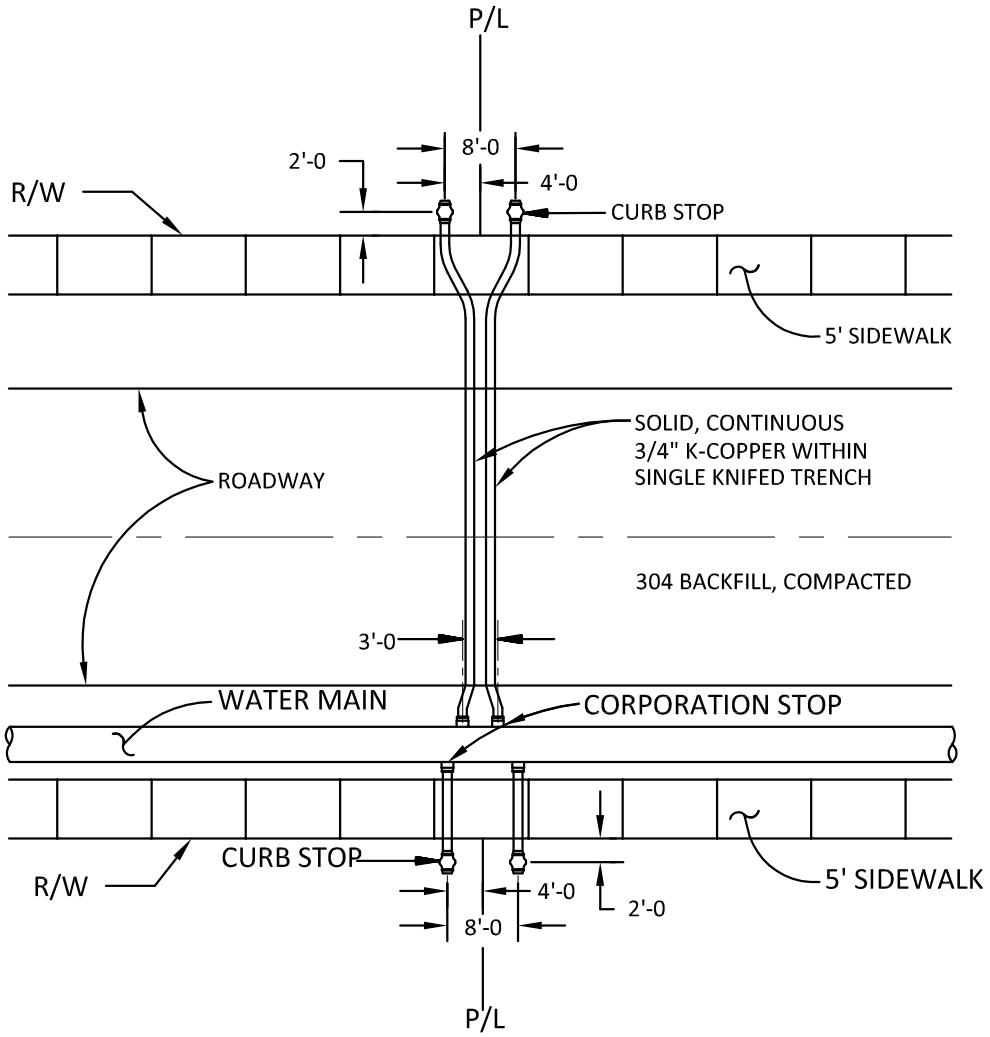

PLAN

NOT TO SCALE

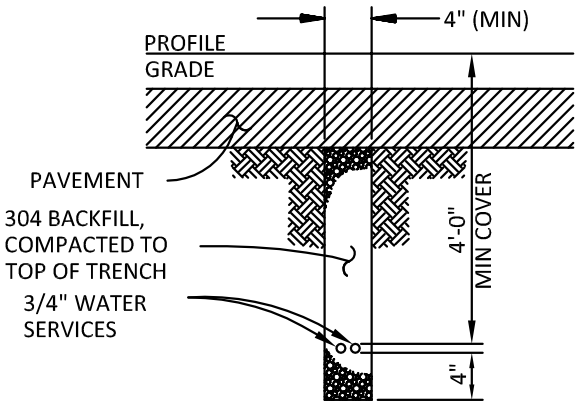

NOTE:
MINIMUM DEPTH - 4'-0"
BELOW FINISHED GRADE

NO SPLICES PERMITTED
IN COPPER LINE BETWEEN
CORPORATION AND CURB
STOPS

WATER SERVICE TRENCH DETAIL

NOT TO SCALE

ENGINEERING DEPARTMENT OF ENGINEERING SERVICES	STANDARD DETAIL WATER SERVICE STREET CROSSINGS (2 SERVICES IN ONE TRENCH)	WATER WTRD-4.0 Rev. 11/09/2012

S:\ENGINEERING\ENGINEERING DEPARTMENT\STANDARDS AND SPECIFICATIONS\2012 STANDARD DRAWINGS\DWG FILES - DO NOT CHANGE\04 WATER\WTRD-4.0_WTR SERVICE ST XINGS.DWG - 12/18/12

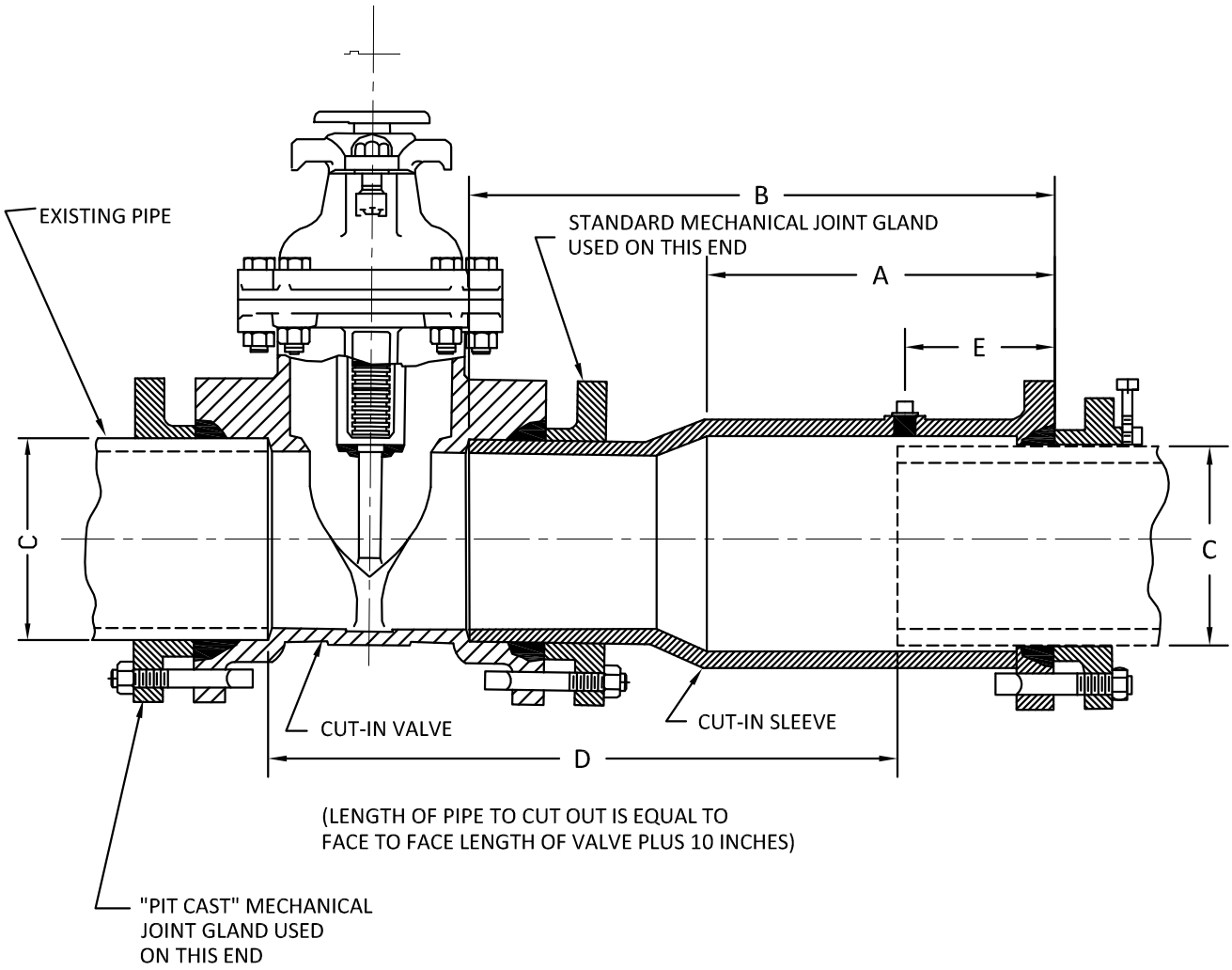

PIPE SIZE	DIM A	DIM B	DIM C (MAX PIPE O.D.)	DIM D	DIM E	WT WITH GLANDS	
						VALVE	SLEEVES
4"	12.66	20.63	5.12	21.00	5.12	93.22 LBS	65 LBS
6"	12.31	20.63	7.23	22.00	5.12	164 LBS	90 LBS
8"	13.13	20.00	9.45	22.50	5.12	247.13 LBS	120 LBS
10"	12.81	20.63	11.52	24.75	5.12	404.33 LBS	155 LBS
12"	12.25	20.63	13.62	26.62	5.12	565 LBS	195 LBS

ENGINEERING
DEPARTMENT OF ENGINEERING SERVICES

STANDARD DETAIL

CUT-IN SLEEVE WATER TAP

WATER

WTRD-5.0

Rev. 11/09/2012

S:\ENGINEERING\ENGINEERING DEPARTMENT\STANDARDS AND SPECIFICATIONS\2012 STANDARD DRAWINGS\DWG FILES - DO NOT CHANGE\04 WATER\WTRD-5.0_CUT-IN SLEEVE TAP.DWG - 12/18/12

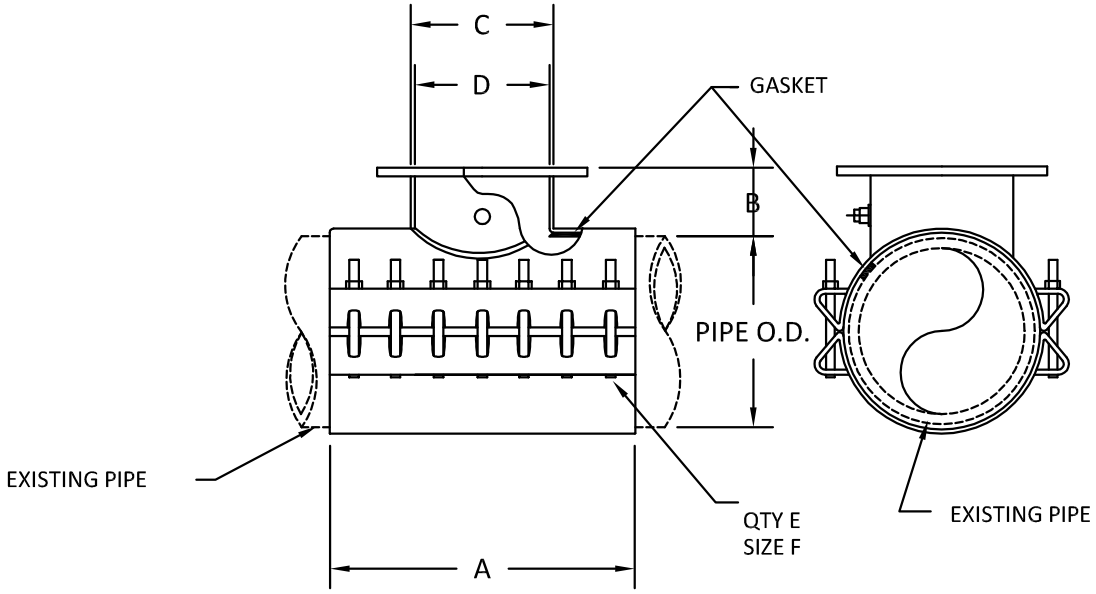

FLANGE SIZE	A	B	C	D	E	F
3	12	5	4-1/32	3-1/2	6	3/4
4	12	5	5-1/32	4-1/2	6	3/4
6	12	5	7-1/32	6-1/2	6	3/4
8	16	5-1/8	9-1/32	8-1/8	8	3/4
10	20	5-1/2	11-1/16	10-1/4	10	3/4
12	24	5-3/4	13-1/16	12-1/4	12	3/4

FOR OUTLETS 14" AND LARGER THE MANUFACTURER OF THE TAPPING VALVE MUST BE SPECIFIED TO ASSURE PROPER ALIGNMENT RECESS DIMENSION.
SIZE ON SIZE TAPPING SLEEVE REQUIRES 1/2" UNDERSIZE CUTTER TO ASSURE PROPER CUTTER CLEARANCE AND COMPLETE SEVERANCE OF THE COUPON ON NOMINAL PIPE SIZE 7.45 AND SMALLER DIMENSION D IS 6-1/8"

ENGINEERING
DEPARTMENT OF ENGINEERING SERVICES

STANDARD DETAIL

FULL BODY WATER TAP

WATER

WTRD-6.0

Rev. 11/09/2012

S:\ENGINEERING\ENGINEERING DEPARTMENT\STANDARDS AND SPECIFICATIONS\2012 STANDARD DRAWINGS\DWG FILES - DO NOT CHANGE\04 WATER\WTRD-6.0_FULL BODY WATER TAP.DWG - 12/18/12

LENGTH OF PIPE (FEET)	GALLONS PER HOUR									
	PIPE SIZE (INCHES)									
	6"	8"	12"	16"	20"	24"	30"	36"	42"	48"
50	0.03	0.04	0.06	0.07	0.09	0.11	0.14	0.17	0.19	0.22
100	0.06	0.07	0.11	0.15	0.18	.0.22	0.28	0.33	0.39	0.44
200	0.11	0.15	0.22	0.29	0.37	0.44	0.55	0.66	0.77	0.88
300	0.17	0.22	0.33	0.44	0.55	0.66	0.83	0.99	1.16	1.32
400	0.22	0.29	0.44	0.59	0.74	0.88	1.10	1.32	1.55	1.77
500	0.28	0.37	0.55	0.74	0.92	1.10	1.38	1.66	1.93	2.21
1000	0.55	0.74	1.10	1.47	1.84	2.21	2.76	3.31	3.86	4.41
5000	2.76	3.68	5.52	7.36	9.20	11.03	13.79	16.55	19.31	22.07
10000	5.52	7.36	11.03	14.71	18.39	22.07	27.58	33.10	38.62	44.14

NOTES:

FORMULA: $L = \frac{SD\sqrt{P}}{133,200}$

WHERE:

L= ALLOWABLE LEAKAGE (GAL./HR.)
S= LENGTH OF PIPE TESTED IN FEET.
D= NOMINAL PIPE DIAMETER IN INCHES.
P= TEST PRESSURE (150 PSI)

THESE CALCULATIONS ARE BASED ON "AWWA C-600" SPECIFICATIONS, SECTION 4, HYDROSTATIC TESTING, DATED APRIL 29, 1982.

WHEN TESTING AGAINST CLOSED METAL-SEATED VALVES, AN ADDITIONAL LEAKAGE PER CLOSED VALVE OF 0.0078 GAL./HR./IN. OF NOMINAL VALVE SIZE WILL BE ALLOWED.

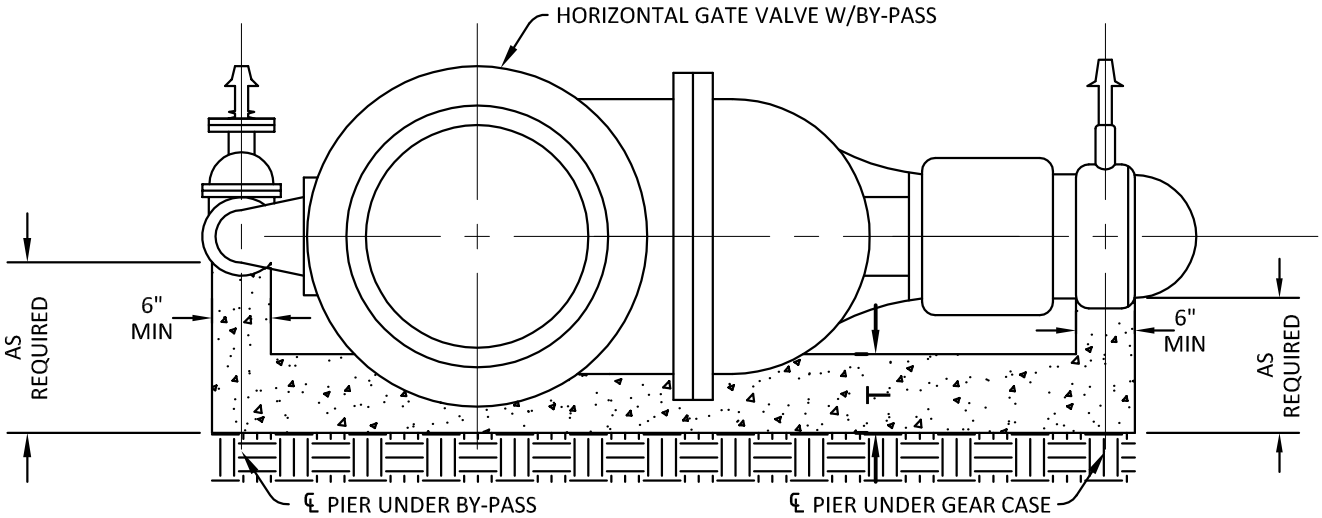

NOTES:

1. DIMENSIONS SHALL BE VARIED AS DIRECTED TO SUIT MAKE OF VALVE FURNISHED.
2. WIDTH SHALL BE AS REQUIRED TO ALLOW ACCESS TO BOLTS. (6" MIN.)
3. T = 6" MINIMUM
4. A LAYER OF POLYETHYLENE SHEETING REQUIRED BETWEEN CONCRETE AND WATERLINE, VALVES, ETC

ENGINEERING DEPARTMENT OF ENGINEERING SERVICES	STANDARD DETAIL CONCRETE VALVE SUPPORT HORIZONTAL GATE VALVER W/BY-PASS	WATER WTRD-8.0 Rev. 11/09/2012

S:\ENGINEERING\ENGINEERING DEPARTMENT\STANDARDS AND SPECIFICATIONS\2012 STANDARD DRAWINGS\DWG FILES - DO NOT CHANGE\04 WATER\WTRD-8.0_VALVE SUPPORT.DWG - 12/18/12

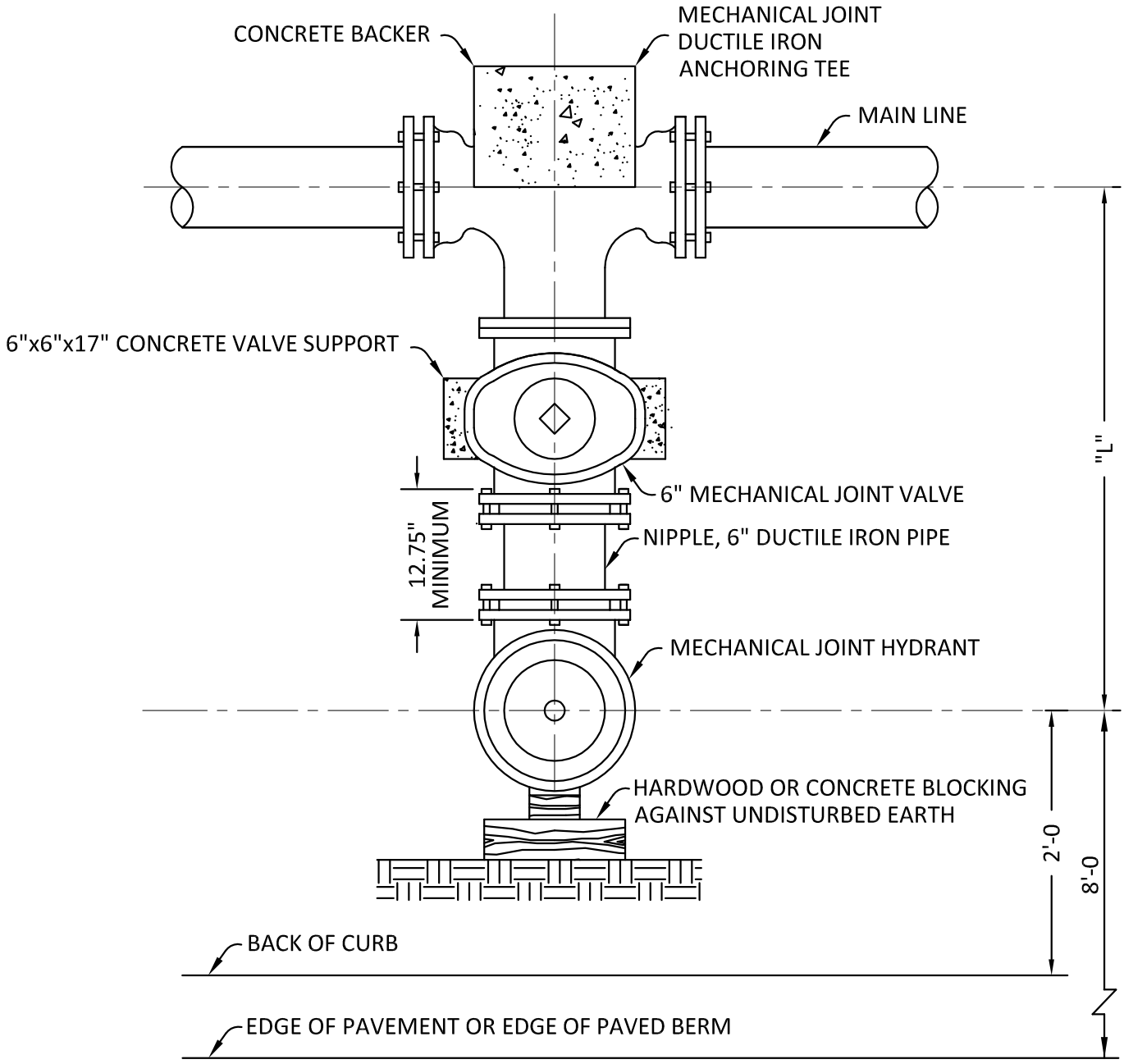

MAIN LINE	DIMENSION "L" (MINIMUM)
6"	35"
8"	36"
12"	39"
16"	42"

NOTES:

1. FIRE HYDRANT SHALL HAVE A MAXIMUM BURY DEPTH OF 7'-0.
2. MODIFICATION OF THE HYDRANT LEAD TO MEET THIS
3. REQUIREMENT SHALL BE MADE IN THAT SECTION FROM
4. THE VALVE TO THE HYDRANT AS PER STANDARD DETAIL
5. WTRD-10.
6. FIRE HYDRANTS SHALL BE SET A MINIMUM OF 6'-0 FROM ALL DRIVEWAY OPENINGS.
4. A LAYER OF POLYETHYLENE SHEETING REQUIRED BETWEEN CONCRETE AND WATERLINE, VALVES, ETC

ENGINEERING
DEPARTMENT OF ENGINEERING SERVICES

STANDARD DETAIL

TYPICAL HYDRANT SETTING
TYPE "A"

WATER

WTRD-9.0

Rev. 11/09/2012

S:\ENGINEERING\ENGINEERING DEPARTMENT\STANDARDS AND SPECIFICATIONS\2012 STANDARD DRAWINGS\DWG FILES - DO NOT CHANGE\04 WATER\WTRD-9.0_TYPE A HYDRANT.DWG - 12/18/12

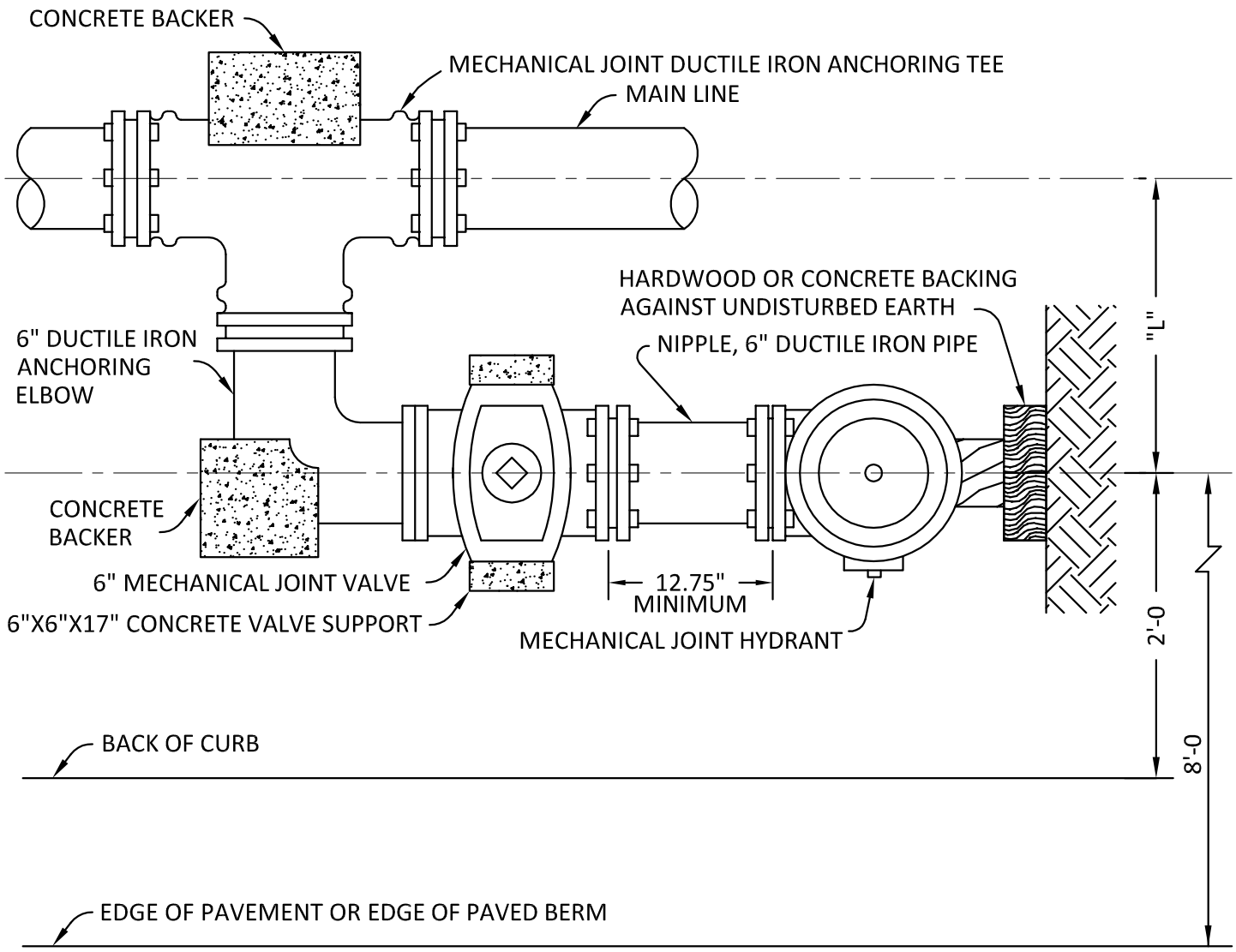

MAIN LINE	DIMENSION "L"	
	TYPE "B"	TYPE "B" MOD.
6"	24"	19"
8"	25"	20"
12"	28"	23"
16"	31"	26"

TYPE"B": LONG SIDE BEND TO TEE
TYPE"B MODIFIED": SHORT SIDE BEND TO TEE

NOTES:

1. FIRE HYDRANTS SHALL BE SET A MINIMUM OF 6'-0 FROM ALL DRIVEWAY OPENINGS.
2. FIRE HYDRANT SHALL HAVE A MAXIMUM BURY OF 7'-0. MODIFICATION OF THE HYDRANT LEAD TO MEET THIS REQUIREMENT SHALL BE IN THAT SECTION FROM THE VALVE TO THE HYDRANT AS PER STANDARD DETAIL WTRD-10.
3. A LAYER OF POLYETHYLENE SHEETING REQUIRED BETWEEN CONCRETE AND WATERLINE, VALVES, ETC.

ENGINEERING
DEPARTMENT OF ENGINEERING SERVICES

STANDARD DETAIL

SPECIAL HYDRANT SETTING

TYPE "B" AND "B" MODIFIED

WATER

WTRD-10.0

Rev. 11/09/2012

S:\ENGINEERING\ENGINEERING DEPARTMENT\STANDARDS AND SPECIFICATIONS\2012 STANDARD DRAWINGS\DWG FILES - DO NOT CHANGE\04 WATER\WTRD-10.0_TYPE B HYDRANT.DWG - 12/18/12

RUN	BRANCH																							
	3"			4"			6"			8"			12"			16"			20"			24"		
	L	D	Vc.f.	L	D	Vc.f.	L	D	Vc.f.	L	D	Vc.f.	L	D	Vc.f.	L	D	Vc.f.	L	D	Vc.f.	L	D	Vc.f.
3"	12	5	0.5																					
4"	10	6	0.5	11	8	0.8																		
6"	9	7	0.5	11	8	0.8	18	12	1.9															
8"	8	8	0.5	10	9	0.7	18	12	1.9	23	16	3.5												
12"	6	12	0.6	8	12	0.8	18	12	1.9	23	16	3.5	38	22	8.7									
16"	6	16	0.8	6	16	0.8	14	16	2.0	20	18	3.3	36	23	8.7	49	30	13.6						
20"	6	20	1.0	6	20	1.0	11	20	1.9	18	20	3.3	35	24	8.7	46	32	13.6	60	38	26.5			
24"	6	24	1.2	6	24	1.2	9	24	1.9	15	24	3.3	30	28	8.7	42	36	14.0	54	42	26.3	68	48	45.4
STEEL WILL BE USED AS REQUIRED BY THE ENGINEER																								

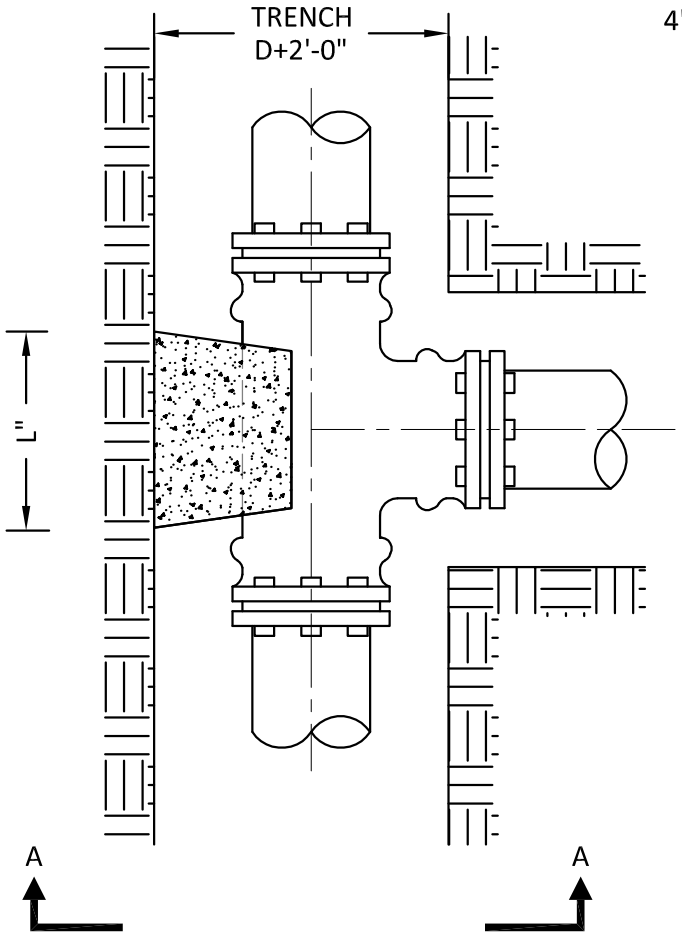

PLAN VIEW

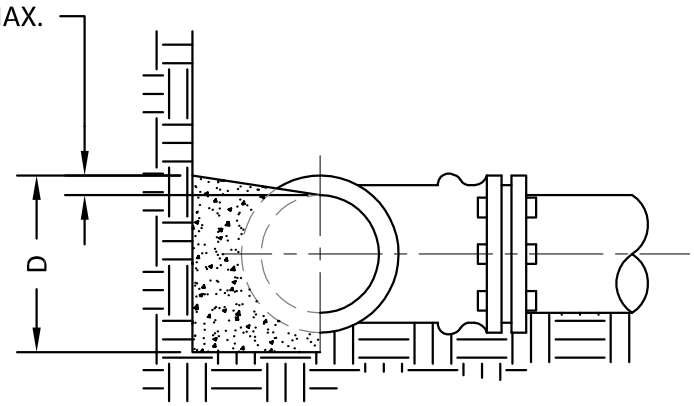

SECTION A-A

NOTES:

1. BACKER DESIGNED FOR 3000 PSF SOIL BEARING.
2. CONCRETE TO BE PLACED AGAINST UNDISTURBED EARTH.
3. PROVIDE CLEARANCE FOR REMOVAL OF BOLTS.
3. A LAYER OF POLYETHYLENE SHEETING REQUIRED BETWEEN CONCRETE AND WATERLINE, VALVES, ETC.

ENGINEERING
DEPARTMENT OF ENGINEERING SERVICES

STANDARD DETAIL

BACKING FOR TEES

WATER

WTRD-11.0

Rev. 11/09/2012

S:\ENGINEERING\ENGINEERING DEPARTMENT\STANDARDS AND SPECIFICATIONS\2012 STANDARD DRAWINGS\DWG FILES - DO NOT CHANGE\04 WATER\WTRD-11.0_BACKING FOR TEES.DWG - 12/18/12

SIZE OF PIPE	DEGREE OF BEND															
	11 ¼°				22 ½°				45°				90°			
	L	W	H	V c.f.	L	W	H	V c.f.	L	W	H	V c.f.	L	W	H	V c.f.
3"	12	18	12	1.5	13	25	16	3.0	18	30	19	5.9	25	30	24	10.4
4"	12	24	16	2.6	16	30	18	5.0	22	36	24	11.0	27	48	25	18.7
6"	12	48	18	6.0	15	43	36	13.4	30	55	24	22.9	37	54	36	41.6
8"	12	63	24	10.5	18	57	34	20.2	36	57	33	39.2	47	60	46	75.0
12"	20	54	36	22.6	37	62	37	49.0	48	62	51	87.9	66	66	66	166.4
16"	31	65	38	44.3	60	65	39	88.1	65	65	65	159.2	72	96	72	288.0
20"	45	70	40	72.8	56	70	60	136.2	72	76	78	247.0	86	108	84	451.8
24"	41	72	54	92.3	67	74	69	198.0	88	84	84	359.1	96	120	96	640.0
STEEL WILL BE USED AS REQUIRED BY THE ENGINEER																

NOTES:
1. BACKER TO BE CENTERED HORIZONTALLY IN BEND.
2. A LAYER OF POLYETHYLENE SHEETING REQUIRED BETWEEN CONCRETE AND WATERLINE, VALVES, ETC.

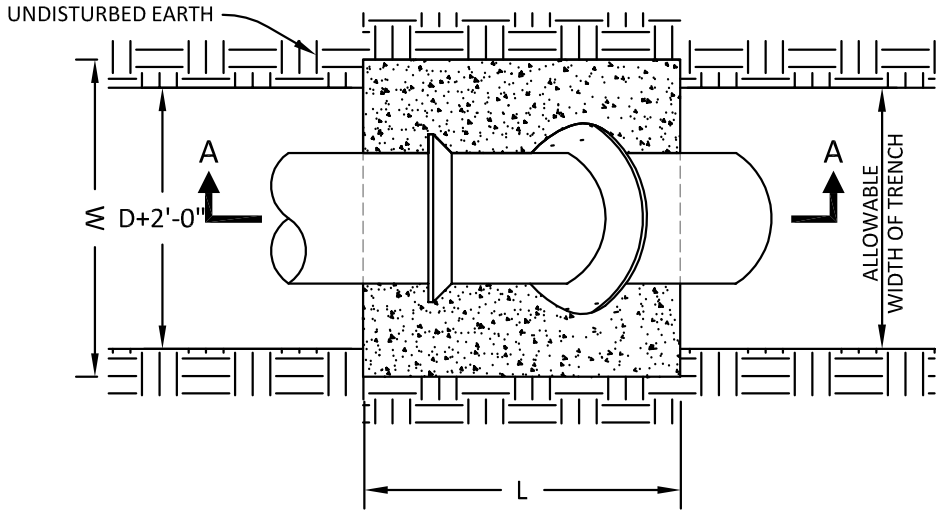

PLAN VIEW

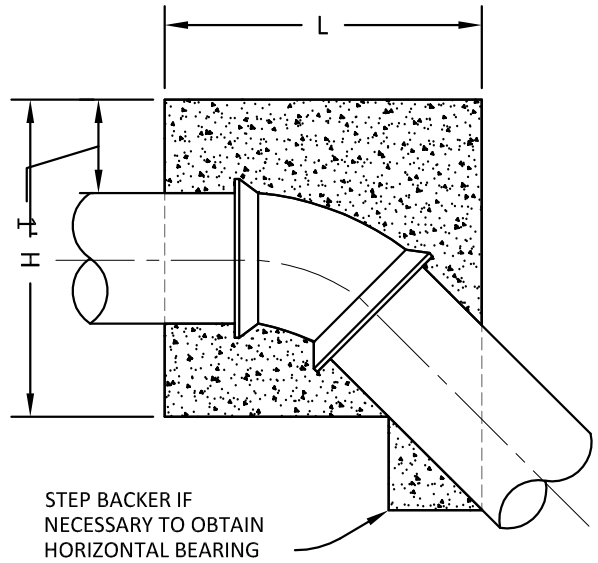

SECTION A-A

DEPARTMENT OF ENGINEERING SERVICES

STANDARD DETAIL

BACKING FOR VERTICAL BENDS

(OVER BENDS ONLY)

WATER

WTRD-12.0

Rev. 11/09/2012

SIZE OF PIPE	DEGREE OF BEND											
	11¼°			22½°			45°			90°		
	L	D	V c.f.	L	D	V c.f.	L	D	V c.f.	L	D	V c.f.
3"	4	3	0.1	6	4	0.2	10	4	0.3	10	4	0.3
4"	5	4	0.2	9	5	0.4	14	5	0.6	14	5	0.6
6"	8	6	0.5	12	7	0.7	20	8	1.4	18	9	1.7
8"	9	8	0.7	16	9	1.4	24	12	2.7	25	11	4.0
12"	14	12	1.8	24	14	3.6	36	18	6.8	32	18	10.7
16"	18	16	3.4	32	18	6.7	36	32	13.4	41	26	25.4
20"	25	20	6.4	30	30	11.5	49	36	20.5	50	32	46.5
24"	27	24	9.0	39	34	18.4	60	42	35.0	58	40	77.7
STEEL WILL BE USED AS REQUIRED BY ENGINEER												

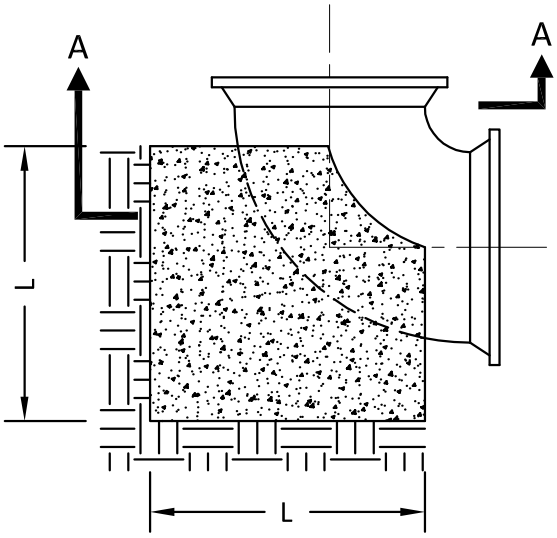

90° BENDS

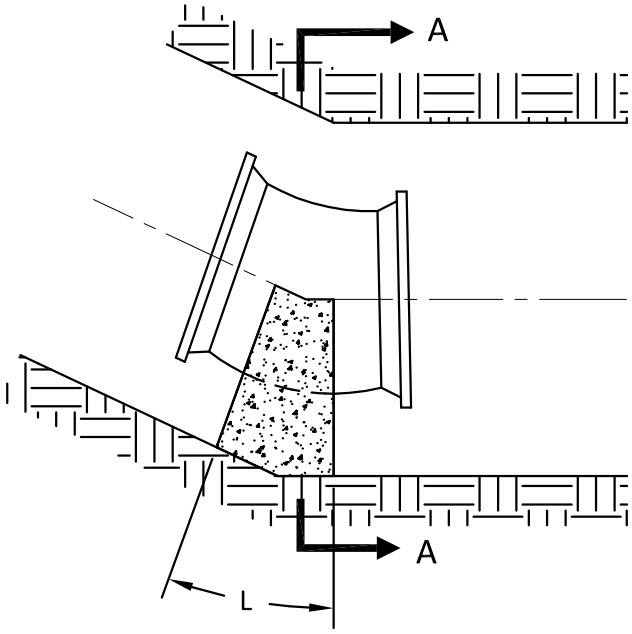

BENDS LESS THAN 90°

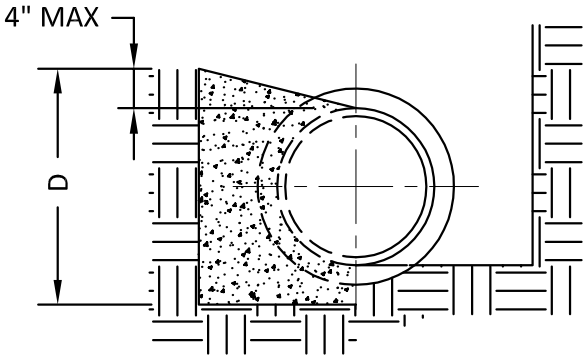

SECTION A-A

NOTES:

1. BACKER DESIGNED FOR 3000 PSF SOIL BEARING.
2. CONCRETE TO BE PLACED AGAINST UNDISTURBED EARTH.
3. A LAYER OF POLYETHYLENE SHEETING REQUIRED BETWEEN CONCRETE AND WATERLINE, VALVES, ETC.

ENGINEERING

DEPARTMENT OF ENGINEERING SERVICES

STANDARD DETAIL

BACKING FOR BENDS

HORIZONTAL AND VERTICAL SAG

WATER

WTRD-13.0

Rev. 11/09/2012

S:\ENGINEERING\ENGINEERING DEPARTMENT\STANDARDS AND SPECIFICATIONS\2012 STANDARD DRAWINGS\DWG FILES - DO NOT CHANGE\04 WATER\WTRD-13.0_BACKING FOR BENDS.DWG - 12/18/12

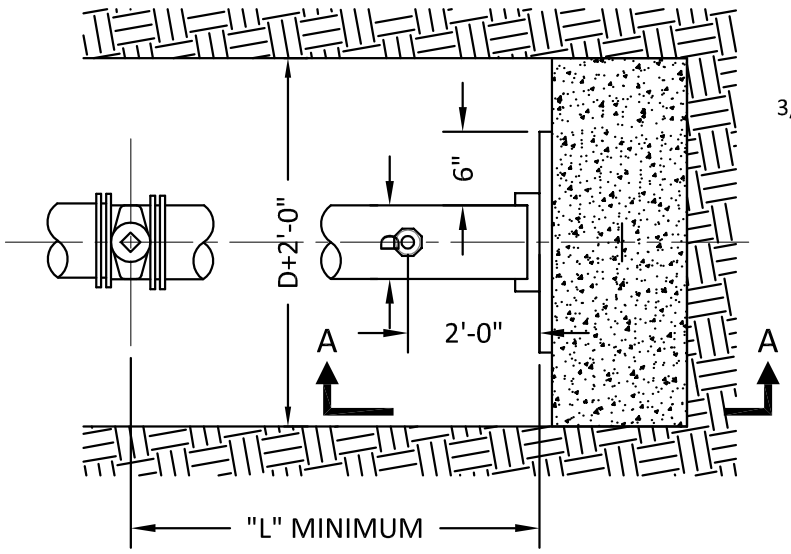

PLAN VIEW

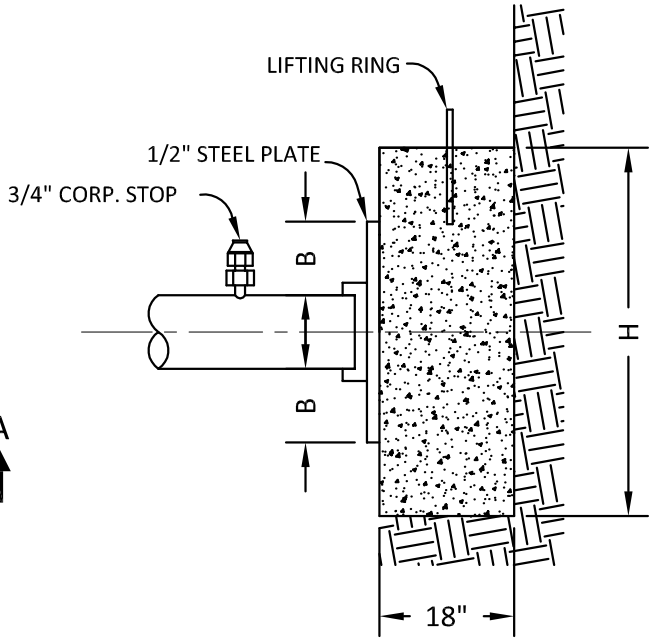

SECTION A-A

PIPE DIAMETER	H	B	L	VOLUME CU. FT.
3"	5"	1"	10'	1.43
4"	6"	1"	10'	1.76
6"	8"	1"	10'	2.52
8"	12"	1"	10'	4.00
12"	23"	3"	18'	8.64
16"	37"	3"	18'	15.39

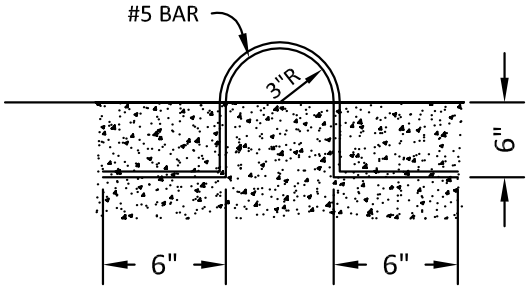

LIFT RING DETAIL

NOTES:

1. BACKER DESIGNED FOR 3000 PSF SOIL BEARING.
2. END OF PIPE CAPPED OR PLUGGED.
3. GREASE STEEL PLATE WHERE IN CONTACT WITH CONCRETE BACKER.
4. PLACE CONCRETE AGAINST UNDISTURBED SOIL.
5. THOROUGHLY COMPACT BACKFILL BETWEEN VALVE AND END OF PIPE.
6. A LAYER OF POLYETHYLENE SHEETING REQUIRED BETWEEN CONCRETE AND WATERLINE, VALVES, ETC.

ENGINEERING
DEPARTMENT OF ENGINEERING SERVICES

STANDARD DETAIL

THRUST BLOCK DETAIL

WATER

WTRD-14.0

Rev. 11/09/2012

S:\ENGINEERING\ENGINEERING DEPARTMENT\STANDARDS AND SPECIFICATIONS\2012 STANDARD DRAWINGS\DWG FILES - DO NOT CHANGE\04 WATER\WTRD-14.0_THRUST BLOCK.DWG - 12/18/12

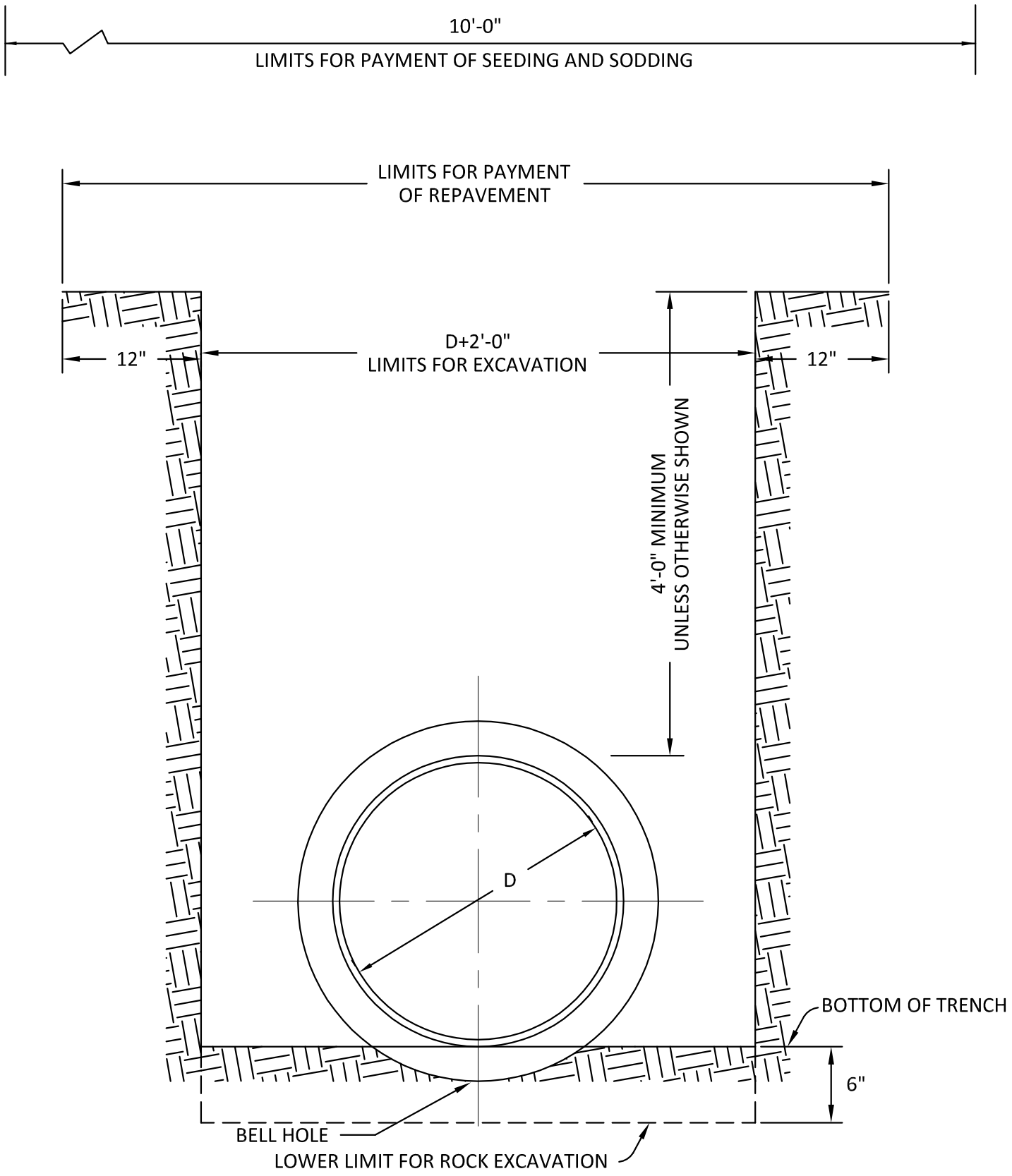

ENGINEERING

DEPARTMENT OF ENGINEERING SERVICES

STANDARD DETAIL

TYPICAL WATER TRENCH

WATER

WTRD-15.0

Rev. 11/09/2012

S:\ENGINEERING\ENGINEERING DEPARTMENT\STANDARDS AND SPECIFICATIONS\2012 STANDARD DRAWINGS\DWG FILES - DO NOT CHANGE\04 WATER\WTRD-15.0_TYPICALTRENCH.DWG - 12/18/12

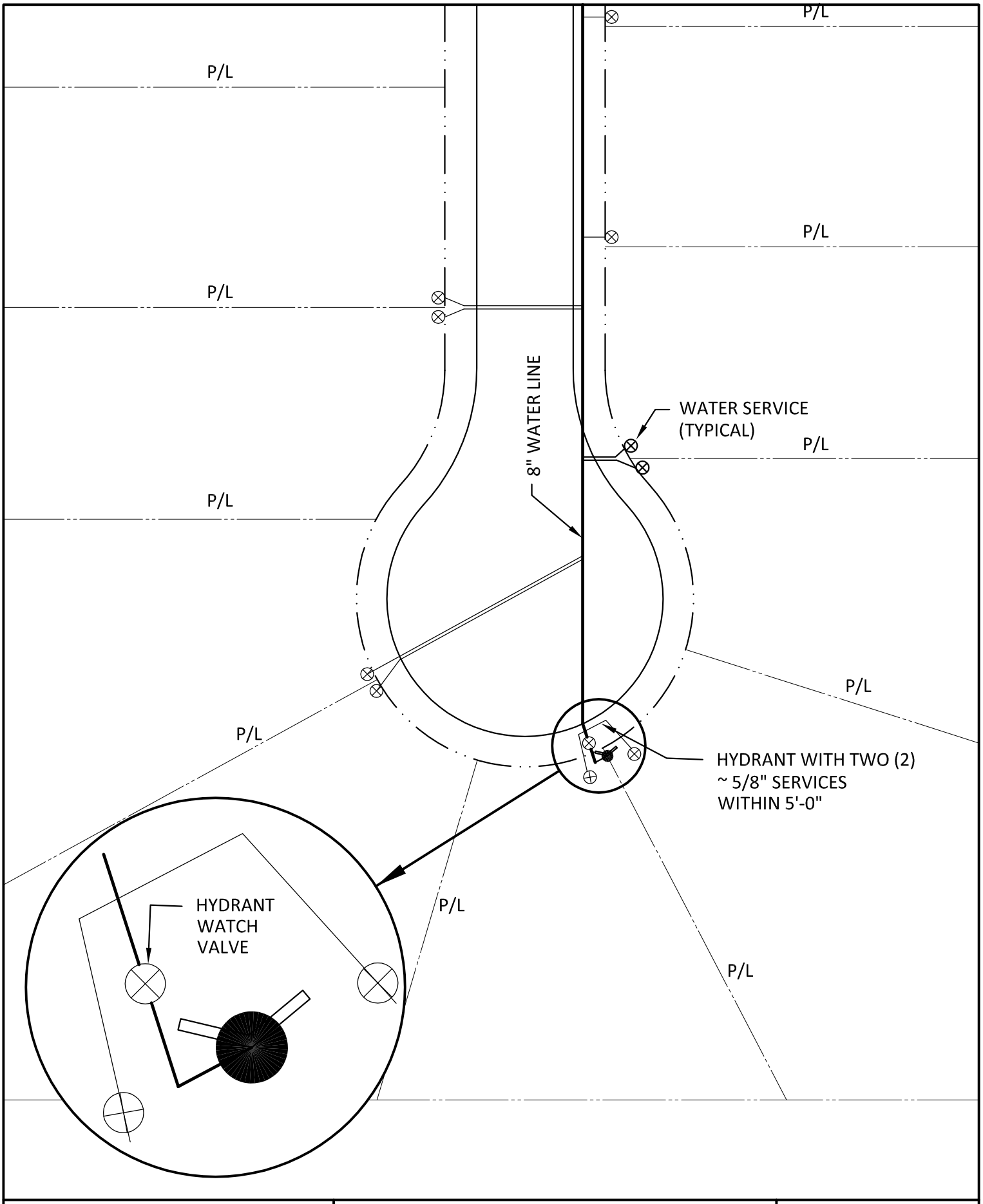

ENGINEERING

DEPARTMENT OF ENGINEERING SERVICES

STANDARD DETAIL

WATER SERVICE DETAIL FOR CUL-DE-SAC

WATER

WTRD-16.0

Rev. 11/09/2012

S:\ENGINEERING\ENGINEERING DEPARTMENT\STANDARDS AND SPECIFICATIONS\2012 STANDARD DRAWINGS\DWG FILES - DO NOT CHANGE\04 WATER\WTRD-16.0_WTR SERVICE CUL-DE-SAC.DWG - 12/19/12

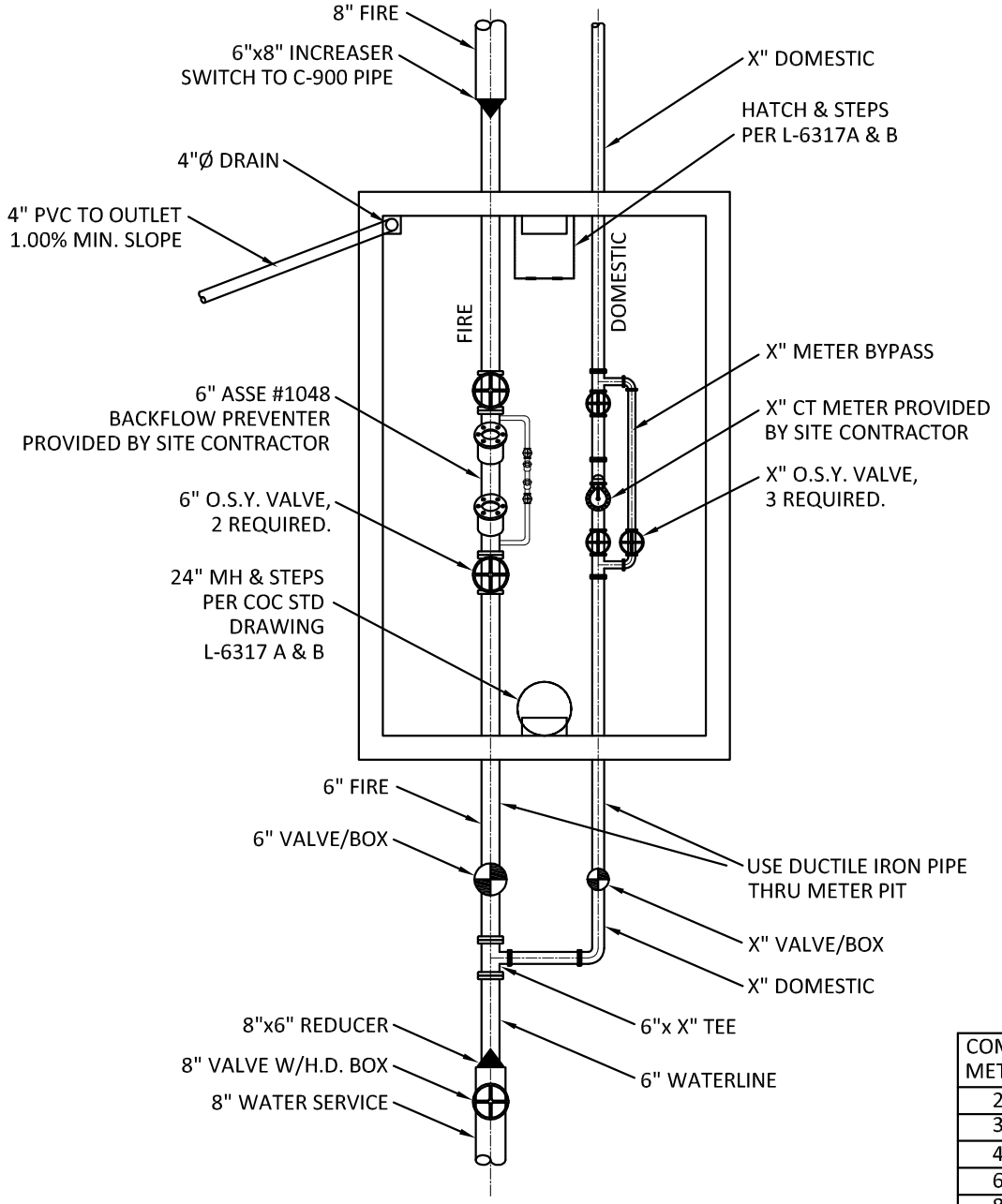

ASSE #1048 BACKFLOW PREVENTER DETECTOR CHECK METER SHALL BE AN ELSTOR AMCO C-700 GLASS LENS ENCODED WITH PIT PAD

COMPOUND METER SIZE	ELSTER AMCO METER MODEL NUMBER
2 INCH	C - 4000
3 INCH	C - 4000
4 INCH	C - 4000
6 INCH	C - 3000
8 INCH	C - 3000
ALL METERS CONFIGURED W/ GLASS LENS ENCODER AND PIT PAD, CU FT REGISTER.	

METER VAULTS - 3" THROUGH 12"

MATERIAL

- THE ISOLATION VALVES SHALL BE FLANGED RESILIENT WEDGE OS & Y TYPE VALVES, AMERICAN FLOW CONTROL SERIES 2800 OR PRE-APPROVED EQUAL.
- ALL 2" AND LARGER METERS SHALL HAVE A FLANGED Z-PLATE STRAINER DIRECTLY PRIOR TO THE WATER METER FROM ELSTER AMCO CO.
- ALL VAULTS SHALL HAVE GRAVITY DRAIN.
- BACKFILL FOR THE METER VAULT SHALL BE ODOT #57 STONE.
- THE PROPERTY OWNER SHALL PURCHASE AN ABB COMPOUND WATER METER LISTED IN THE TABLE ABOVE. THE METER IS TO BE SENT TO THE CITY OF DELAWARE 5 DAYS PRIOR TO THE INTENDED INSTALLATION DATE: DEPARTMENT OF PUBLIC UTILITIES, WATER DISTRIBUTION DIVISION.

INSTALLATION

- THE METER BOX IS TO BE INSTALLED PER THE CITY OF DELAWARE DRAWING AND SPECIFICATIONS.
- THE PROPERTY OWNER SHALL CONFIRM THAT THE ELEVATION OF THE GRAVITY DRAIN DISCHARGE POINT WILL DRAIN THE VAULT.
- THE CITY OF DELAWARE WILL DELIVER THE WATER METER TO THE JOB SITE UPON REQUEST BY THE PROPERTY OWNER.
- THE METER IS TO BE INSTALLED SUCH THAT THERE ARE 5 PIPE DIAMETERS OF STRAIGHT PIPE UPSTREAM OF THE METER STRAINER (INCLUDING THE VALVE) TO THE TEE AND 3 PIPE DIAMETERS OF STRAIGHT PIPE DOWNSTREAM OF THE METER (ROM THE METER TO THE VALVE).
- ALL MECHANICAL JOINTS WITHIN THE METER VAULT SHALL BE FACTORY MANUFACTURED FLANGES; NO UNI-FLANGES ARE PERMITTED.
- ALL JOINTS AND FITTINGS LOCATED ON THE SUPPLY SIDE WITH 20 FEET OF THE METER VAULT SHALL BE RESTRAINED USING AN APPROVED MECHANICAL JOINT RESTRAINT.

ENGINEERING
DEPARTMENT OF ENGINEERING SERVICES

STANDARD DETAIL

5" TO 12" DUAL METER SETTING DETAIL

WATER

WTRD-17.0

Rev. 12/15/2012

S:\ENGINEERING\ENGINEERING DEPARTMENT\STANDARDS AND SPECIFICATIONS\2012 STANDARD DRAWINGS\DWG FILES - DO NOT CHANGE\04 WATER\WTRD-17.0_DUAL METER DETAIL.DWG - 12/19/12

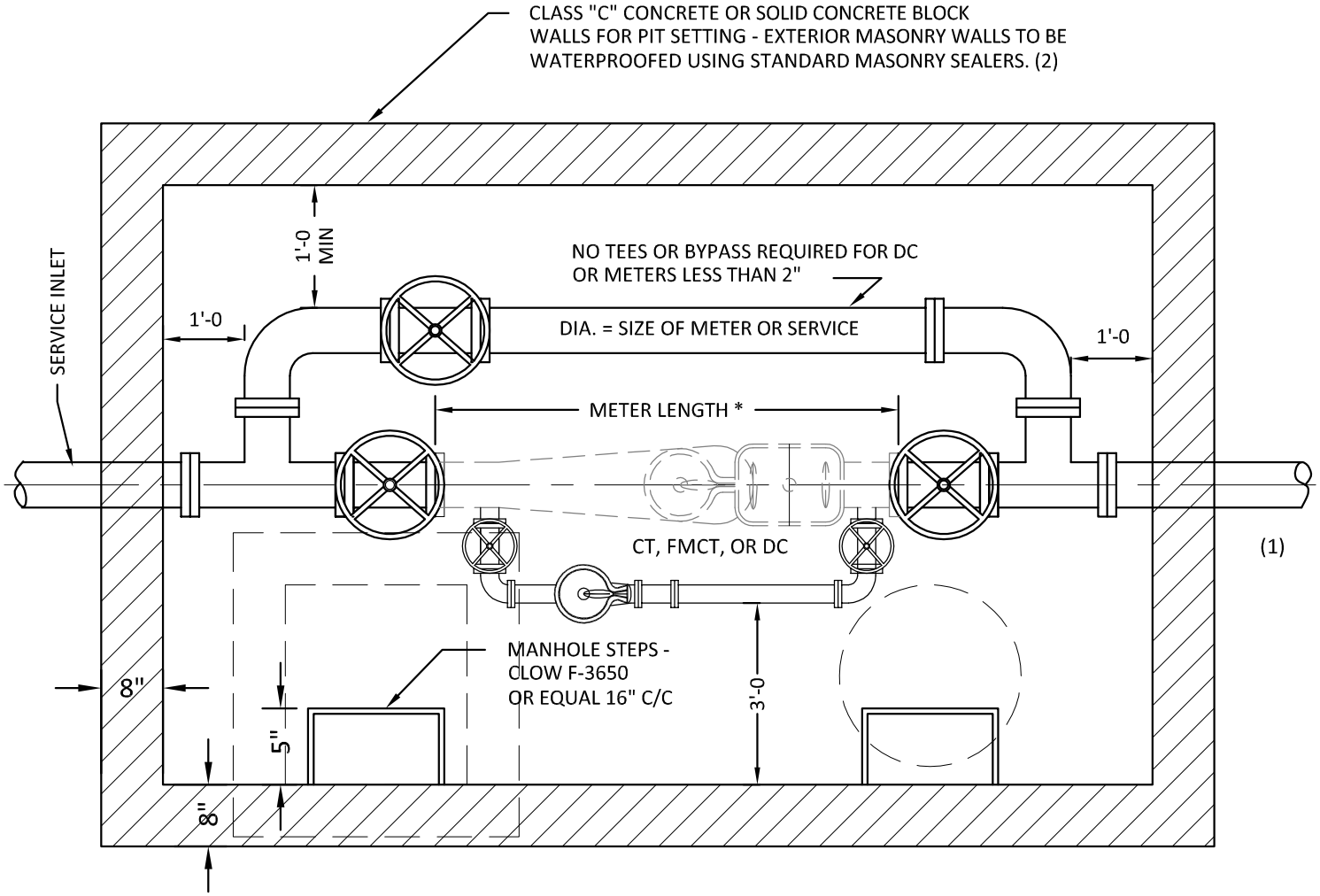

NOTES:

1. AN APPROVED ABOVE GROUND ENCLOSURE SUCH AS THE HOT BOX® MAY BE USED IN LIEU OF A PIT FOR BACKFLOW PREVENTION.

2. AN APPROVED PRECAST METER PIT MAY BE USED IN LIEU OF A CONSTRUCTED PIT FOR OUTSIDE SETTINGS.

* COMPOUND TURBINE METER WITH REMOTE READ AND DUAL CHECK-DETECTOR METER ASSEMBLY.

ENGINEERING DEPARTMENT OF ENGINEERING SERVICES	STANDARD DETAIL METER VAULT 3" TO 12"	WATER WTRD-18.1 Rev. 12/15/2012

S:\ENGINEERING\ENGINEERING DEPARTMENT\STANDARDS AND SPECIFICATIONS\2012 STANDARD DRAWINGS\DWG FILES - DO NOT CHANGE\04 WATER\WTRD-18.1_3-12 METER VAULT.DWG - 12/19/12

NOTE:
METER VAULTS SHALL NOT BE INSTALLED IN A PAVED AREA WITHOUT THE APPROVAL OF THE PUBLIC UTILITIES DEPARTMENT - DISTRIBUTION DIVISION

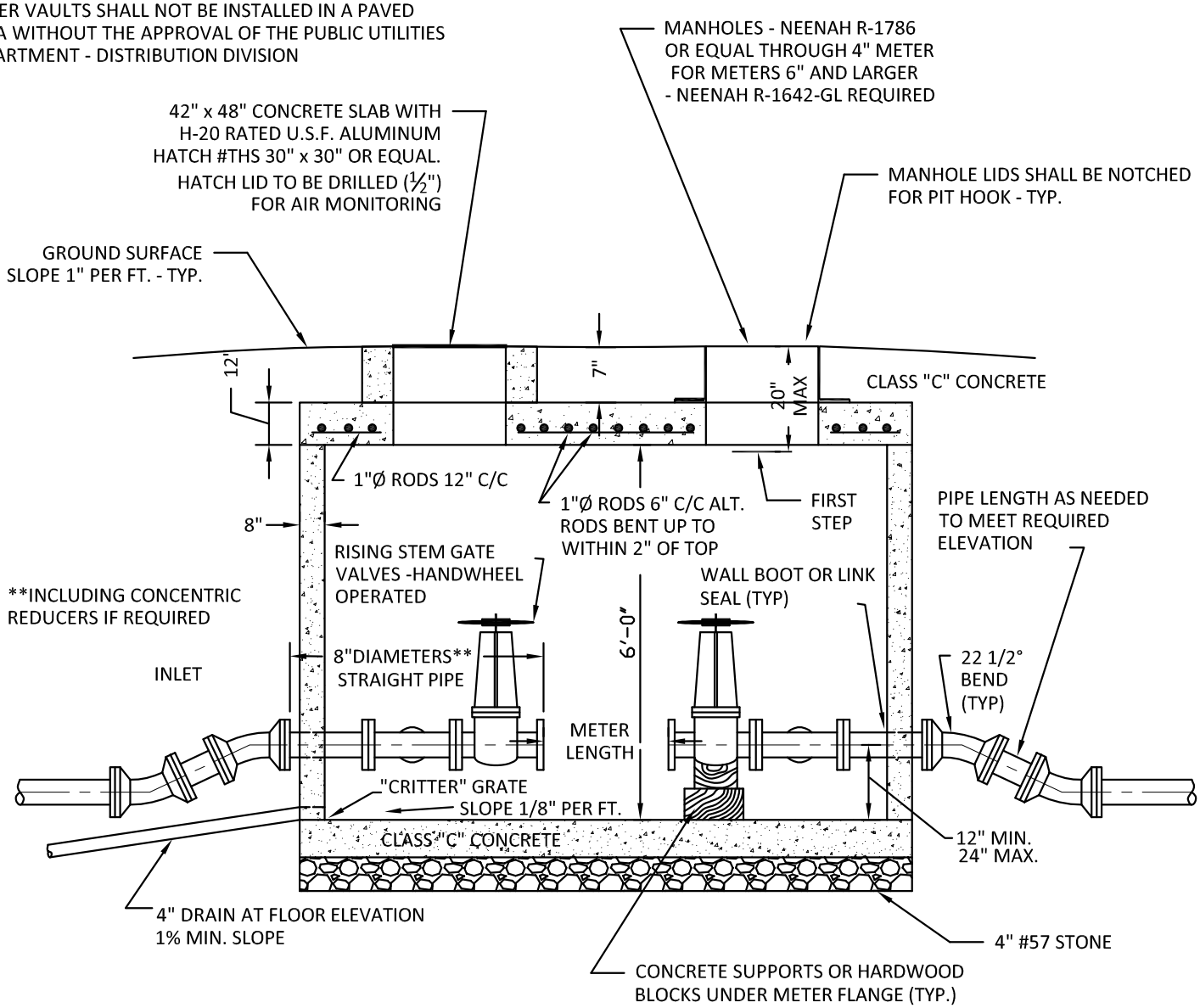

NOTES:

1. A SUMP PUMP WILL BE REQUIRED WHEREVER ADEQUATE DRAINAGE IS NOT AVAILABLE.
2. USE OF A PUMP MUST BE APPROVED BY THE PUBLIC UTILITIES DEPARTMENT
3. ALL VALVES 3" AND LARGER SHALL BE A RESILIENT WEDGE VALVE AND SHALL BE EQUIPPED WITH AN OUTSIDE SCREW AND YOKE ASSEMBLY (O.S. & Y.).
4. THE VAULT FLOOR SHALL BE A MIN. OF 18" ABOVE THE FLOW LINE OF THE DRAINAGE DITCH OR STORM SEWER.
5. THE OWNER OR AGENT SHALL PURCHASE THE AMCO WATER METER NEEDED AND DELIVER IT TO THE PUBLIC UTILITIES DEPT. 3080 US 23 NORTH, DELAWARE,OH. THE OWNER SHALL CONTACT THE PUBLIC UTILITIES DEPT. 48 HOURS PRIOR TO THEIR NEED FOR THE METER TO BE DELIVERED TO THE SITE.
6. ALL MECHANICAL JOINTS WITHIN THE METER VAULT SHALL BE FACTORY MANUFACTURED FLANGES; NO UNIFLANGES ARE PERMITTED.
7. ALL JOINTS AND FITTINGS LOCATED ON THE SUPPLY SIDE WITHIN 20 FEET OF THE METER VAULT SHALL BE RESTRAINED USING AN APPROVED MECHANICAL JOINT RESTRAINT.
8. THE MANHOLE (NOT THE ACCESS DOOR) MUST HAVE HOLES BORED IN IT TO RECEIVE THE METER TOUCH PADS.

ENGINEERING DEPARTMENT OF ENGINEERING SERVICES	STANDARD DETAIL METER SETTING 3" THROUGH 12" METERS	WATER WTRD-18.2 Rev. 12/15/2012

S:\ENGINEERING\ENGINEERING DEPARTMENT\STANDARDS AND SPECIFICATIONS\2012 STANDARD DRAWINGS\DWG FILES - DO NOT CHANGE\04 WATER\WTRD-18.2_METER SETTING 3 - 12.DWG - 12/19/12

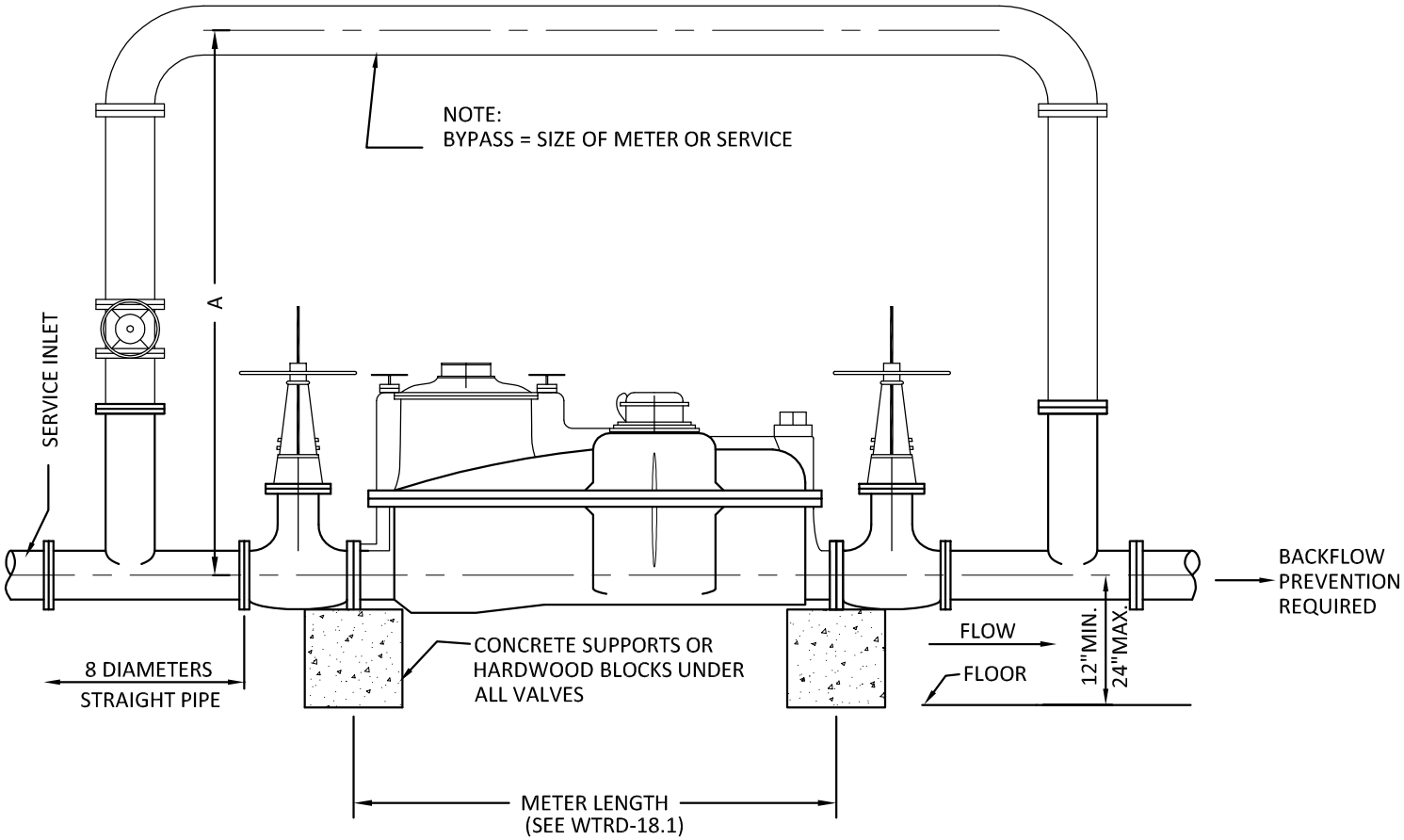

NOTES:

TEES AND BYPASS NOT REQUIRED FOR DCDA OR METERS LESS THAN 2"

BYPASS MUST BE INSTALLED IN VERTICAL POSITION

WALL CLEARANCE
THERE SHALL BE A MINIMUM SIDE CLEARANCE OF 24" FOR ALL METER TYPES AND SIZES FROM THE NEAREST PIPE EXTERIOR TO THE NEAREST BUILDING WALL AND/OR OBSTRUCTION. THIS MINIMUM SIDE CLEARANCE SHALL BE MAINTAINED FROM INLET VALVE TO OUTLET VALVE.

VALVING
3" AND LARGER SHALL BE GATE VALVES WITH OUTSIDE STEMS AND YOKES (O.S.& Y.).

CLEARANCE REQUIRED "A"		
METER SIZE	CT	FMCT
3"	42"	48"
4"	45"	52"
6"	54"	60"
8"	N/A	70"
10"	N/A	78"
12"	N/A	86"

ENGINEERING
DEPARTMENT OF ENGINEERING SERVICES

STANDARD DETAIL

METER SETTING FOR INSIDE BUILDINGS

3" THROUGH 12" (DOMESTIC OR PROCESS)

WATER

WTRD-18.3

Rev. 12/15/212

S:\ENGINEERING\ENGINEERING DEPARTMENT\STANDARDS AND SPECIFICATIONS\2012 STANDARD DRAWINGS\DWG FILES - DO NOT CHANGE\04 WATER\WTRD-18.3_METER SETTING 3-12.DWG - 12/19/12

S:\ENGINEERING\ENGINEERING DEPARTMENT\STANDARDS AND SPECIFICATIONS\2012 STANDARD DRAWINGS\DWG FILES - DO NOT CHANGE\04 WATER\WTRD-19.0_STREAM CROSSING MONITORING VAULT.DWG - 12/19/12

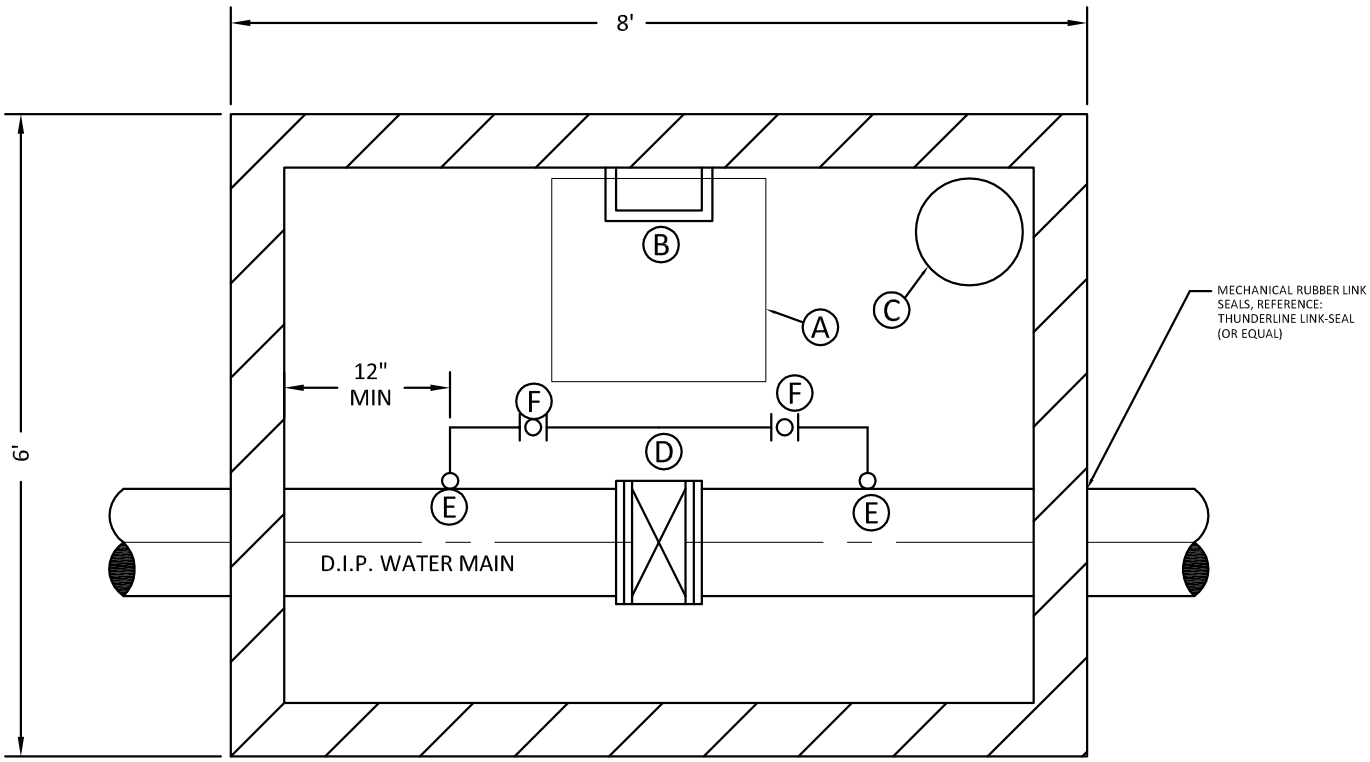

Ⓐ 30" x 30" BILCO STYLE J2AL HATCH RATED FOR WATER LOADING (OR EQUAL)

Ⓑ SERVICE LADDER OR COATED MANHOLE STEPS

Ⓒ SUMP FOR PORTABLE PUMP

Ⓓ R.S.G.V. W/MECHANICAL JOINT RESTRAINTS

Ⓔ STANDARD CORPORATION STOP

Ⓕ 3/4" BALL VALVE

PRECAST NOTES:

1. PRECAST CONCRETE STRUCTURE LOADS AND FLOTATION RESISTANCE REQUIRED
2. THE CONTRACTOR SHALL FURNISH CERTIFICATION BY A REGISTERED PROFESSIONAL ENGINEER THAT THE STRUCTURE WILL WITHSTAND THE LOADS AND PRESSURES FROM:
   A. WATER LEVEL INSIDE AT AN ELEVATION OF 6-INCHES BELOW FINISHED GRADE.
   B. SATURATED SOIL OUTSIDE AS INDICATED NT THE DRAWINGS SIMULTANEOUSLY WITH GROUND WATER AT AN ELEVATION OF 6-INCHES BELOW FINISHED GRADE AND THE STRUCTURE EMPTY.
   C. FLOATATION CAUSED BY WATER OUTSIDE AT AN ELEVATION OF 6-INCHES BELOW FINISHED GRADE AND THE STRUCTURE EMPTY.
3. THE CONTRACTOR SHALL PREVENT THE UP LIFT OF THE VALVE BOX DURING CONSTRUCTION BY PREVENTING WATER FROM ENTERING THE EXCAVATION UNTIL THE STRUCTURE IS STABILIZED WITH BACKFILL.
4. THE CONCRETE TOP SHALL BE DESIGNED TO WITHSTAND HIGHWAY LOADING.
5. CONTRACTOR THE COORDINATE TAPPING SADDLE LOCATION WITH TYPICAL VALVE SETTING USED BY THE CITY OF DELAWARE.
6. THE BEARING CAPACITY FOR THE FIRM, UNDISTURBED SOIL SHALL BE 1,500 PSF.

ENGINEERING DEPARTMENT OF ENGINEERING SERVICES	STANDARD DETAIL MONITORING VAULT DETAIL	WATER WTRD-19.0 Rev. 12/15/2012

DOMESTIC AND FIRE SERVICE METER CONFIGURATION

NO SCALE

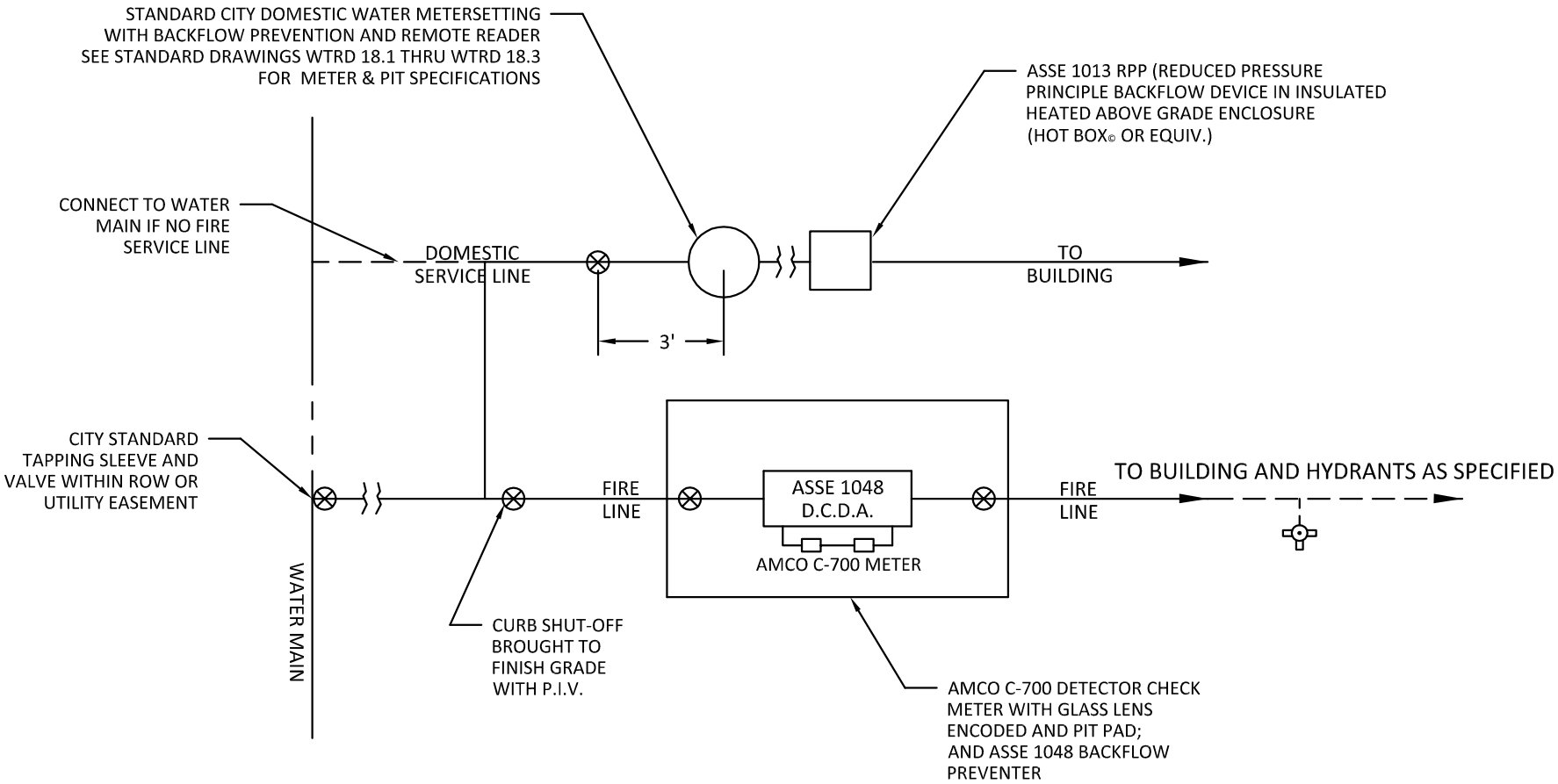

NOTE: THE CITY PROVIDES 5/8" METERS ONLY

ENGINEERING
DEPARTMENT OF ENGINEERING SERVICES

STANDARD DETAIL

5/8" TO 2" METERS FOR
DOMESTIC AND FIRE SERVICE

WATER

WTRD-20.0

Rev. 12/15/2012